VC008

系列多針機

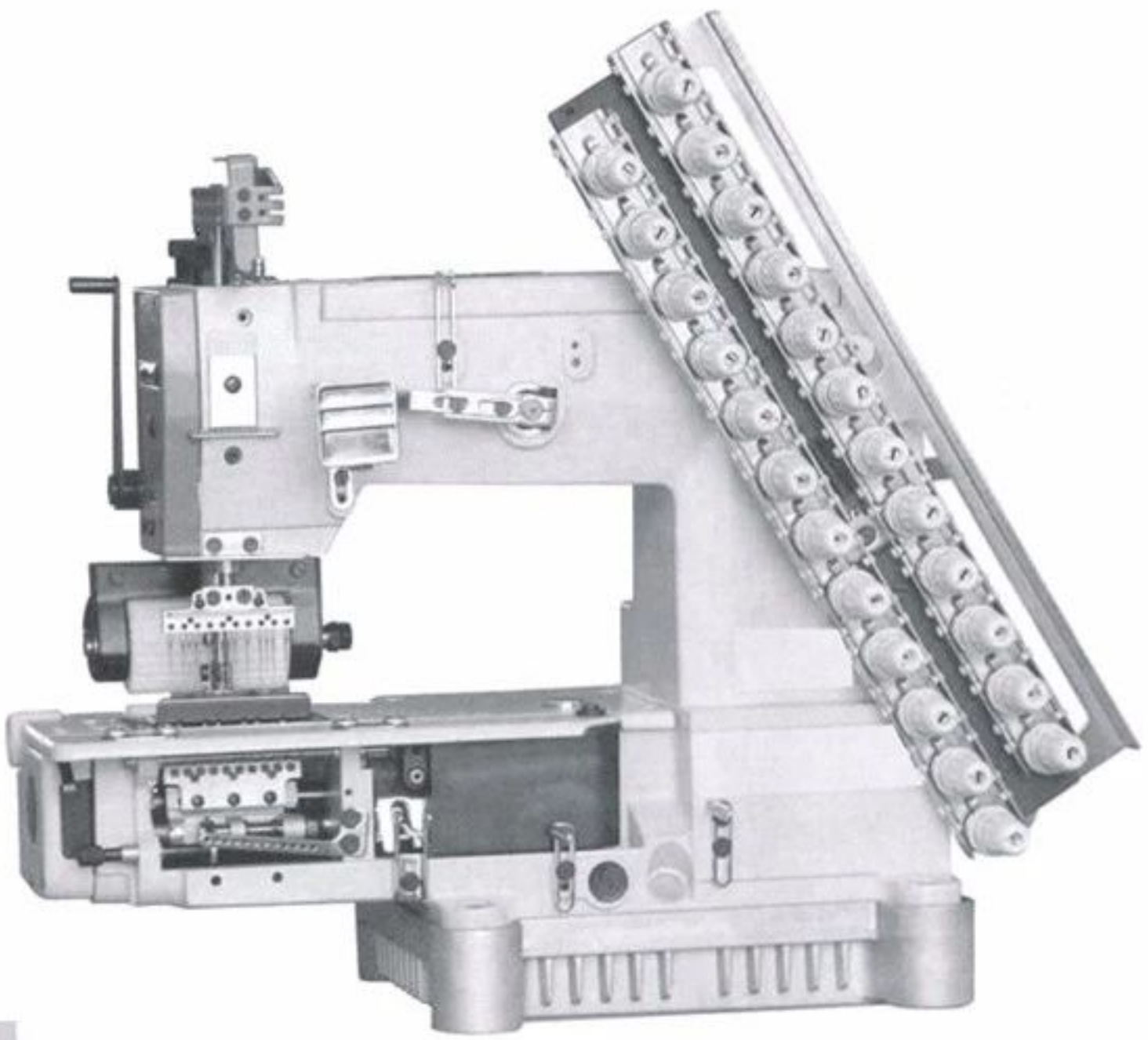

使用說明書/零件圖

CE INSTRUCTION BOOK

好推手縫制商机

General Safety Instructions

Warning ! When using this machine, basic safety precautions should always be followed to reduce the risk of fire, electric shock and personal injury, including the following.
Read all these instructions before operating this product and save these instructions.

1. Keep work area clean.
   - Cluttered areas and benches invite injuries.
2. Consider work area environment.
   - Do not expose power to rain. Do not use machine tools in damp or wet locations. Keep work area well lit. Dot not use power tools where there is risk to cause fire or explosion.
3. Guard against electric shock.
   - Avoid body contact with earthed or grounded surfaces (e.g. pipes, radiators, ranges refrigerators).
4. Keep children away.
   - Do not let visitors touch the tool or extension code.
5. Dress properly.
   - Do not wear loose clothing or jewelry, they can be caught in moving parts. Wear protecting hair covering to contain long hair.
6. Do not abuse the cord.
   - Never carry the machine by cord or yank it to disconnect it from the socket. Keep the cord away from heat, oil and sharp edges.
7. Maintain machine with care.
   - Follow instructions for lubrication and changing accessories. Inspect tool cord periodically and if damaged have it repaired by an authorized serviced facility.
8. Disconnect machine
   - When not in use, before servicing and when changing accessories.
9. Avoid unintentional starting.
   - Do not carry a plugged – in tool with a finger on the switch. Ensure switch is off when plugging in .
10. Check damaged parts.
    - Before further use of the tool, a guard or other part that is damaged should be carefully checked to determine that it will operate properly and perform its intended function.
11. Warning.
    - The use of any accessory or attachment, other than those recommended in this instruction manual, may present a risk of personal injury.

12. Have your tool repaired by a qualified person.
    - Repairs should only be carried out by qualified persons using original spare parts.

Special Warning For Electric Connection !

1. Incorporate this machine only with "CE" certificate hold –to – run control device.
2. Follow the instruction manual device to install control device.
3. Always earth machine appropriately during operation.
4. Before adjustment, parts change or servicing must be sure to pull out the plug from socket to prevent the hazard of unintentionally start of machine.

好推手缝制商机

索　引	INDEX	頁/PAGE

使用說明	OPERATION GUIDE	
機器如何安裝	TO INSTALL A MACHINE	1
潤滑油之注入與更換	LUBRICANT OIL FILLING AND REPLACEMENT	2
針之更換	TO REPLACE NEEDLES	2
穿線之方法	THREADING	3
控線之調整	THREAD TENSION ADJUSTMNET	3
縫距之調整	STITCH LENGTH ADJUSTMENT	4
押具壓力強度之調整	ADJUSTING THE PRESSURE OF PRESSER FOOT	4
穿線圖	THREADING DIAGRAM	5
桌板圖	TABLE CUT -OUT	6
重要安全事項說明	IMPORT SAFETY INSTRUCTION	10

MODEL		VC008	
Net Weight (Kgs)	42	Noise Level, dB(A)	As attached I
Serial No.		Vibration (m/sec2)	
Dimension	Length 45.5cm	Width 23cm	Height 36cm

好推手缝制商机

機器如何安裝 TO INSTALL A MACHINE

1. 依本機器所附桌板裁製圖及零件組合圖所列之配件，依序安裝防震機座,及線架(圖 1 & 2).

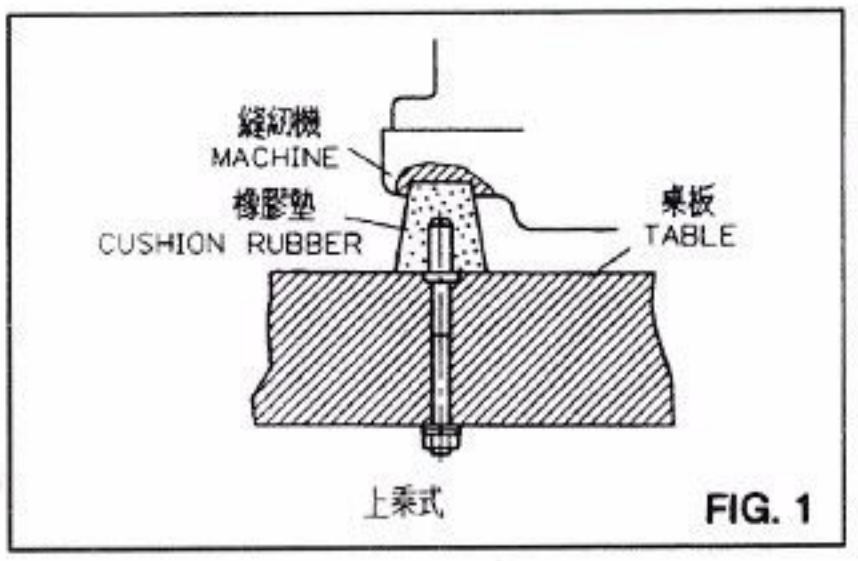

FIG. 1

1. With reference to diagrams for table cutting and mounting parts list, install vibration-reducing base and thread stand in sequence (Fig. 1 & 2)

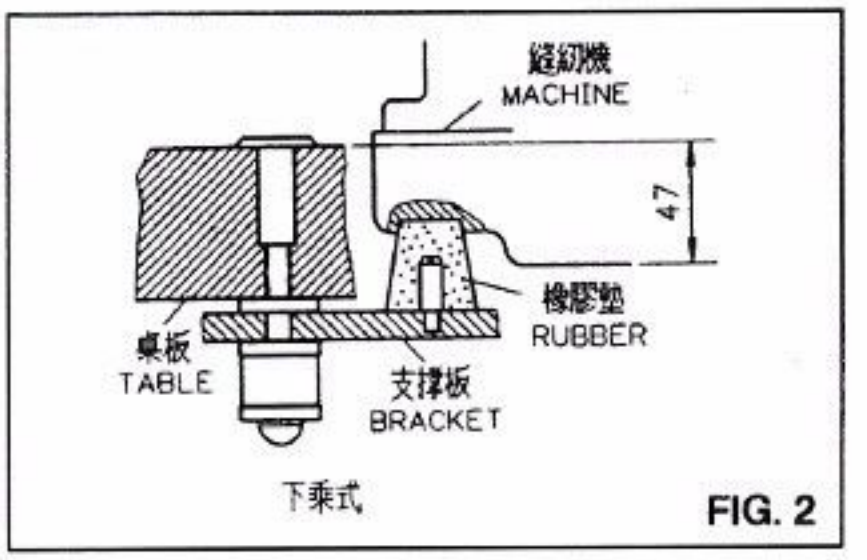

FIG. 2

2. 馬達之轉向爲順時針方向，皮帶之鬆緊度以用手指能向內壓 20mm 爲宜,同時爲安全起見請皮帶蓋必須鎖上. (圖 3 & 4).

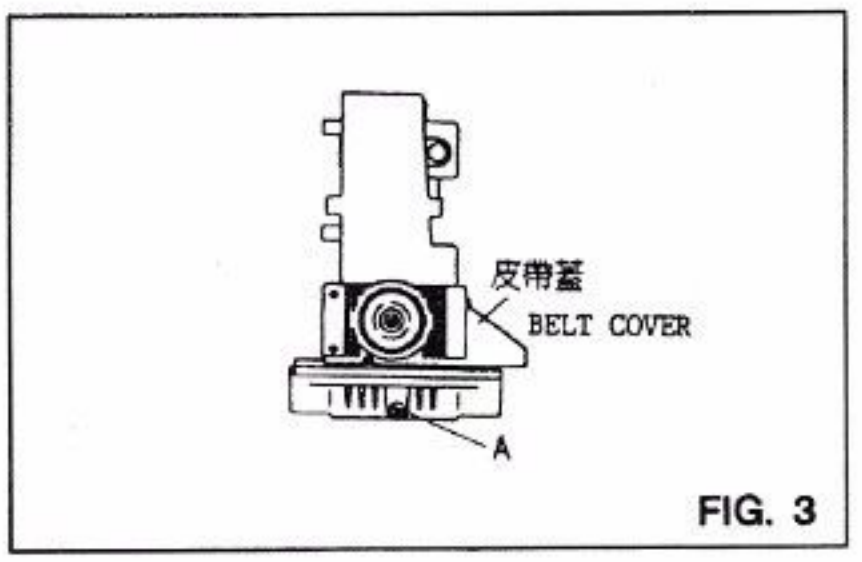

FIG. 3

2. Motor should run clockwise with proper tension for driving belt. It can be checked by pushing belt inward for 20mm. Please install belt cover properly for safety purpose . (Fig. 3 & 4)

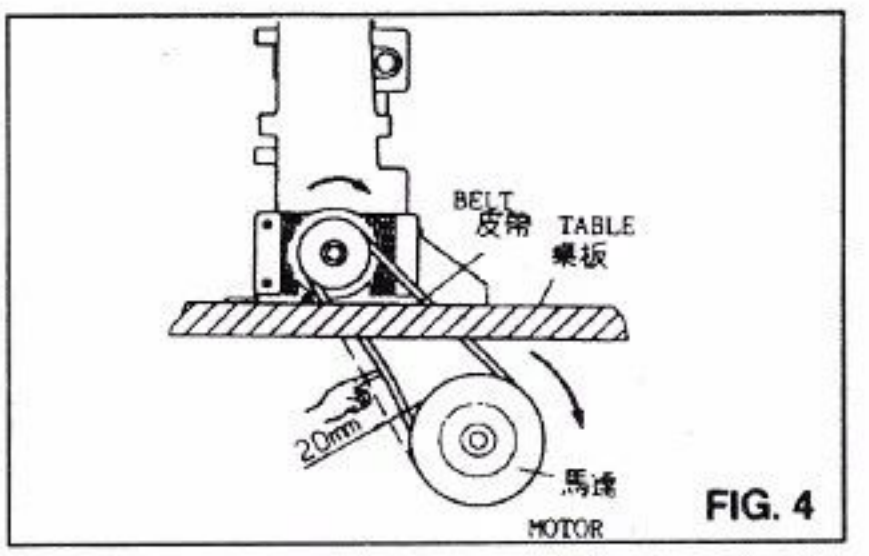

FIG. 4

3. 皮帶輪及縫合轉速，請參照(表 2).

3.Motor pulley size and sewing speed, please refer to Table No.2

注 意：

1. 使用新機器最初一個月運轉速度約爲最高速(表 2)之 80%，並請選擇正確的馬達皮帶輪尺寸(表 1).
2. 桌板厚度約 50mm .
3. 馬達規格:離合器馬達, 3 相 2 極 400 瓦 (1/2HP) .
4. 皮帶規格:M 型 V 字皮帶.

Remarks:

1. New machines run a speed at approximately 80% of the Maximum speed in the first month (Tab. 1). Be sure to choose proper motor pulley for your machine.
2. Thickness of Table Top is about 50mm.
3. Specification of motor: Clutch motor 3 Phase, 2 poles, 400 W (1/2 HP).
4. Driving Belt : M type, V belt.

好推手縫制商机

潤滑油之注入與更換

新機器運裝前均已將油倒盡，因此機器使用前必須加入潤滑油.

1. 潤滑油之注入(圖 5 & 6)：
   將(A)旋開，以包裝箱內所附之超高速潤滑油或選用 MOBIL#10 或 ESSO#32 等級之潤滑油加入，直至油窗(C)內之＝ 油標線間即可.然後再鎖緊(A).

2. 潤滑油之更換:(圖 3)

   *將螺絲(A)鬆開，使油槽之油完全排出後再鎖緊.
   *爲延長本機器之壽命，請於開始使用四星期後更換新油，爾後約每四個月更換一次.

3. 濾油器之更換(圖 7)：
   本機器特別裝有濾油器，約每使用一個後應卸下清洗，必要時得更換新品.

LUBRICANT OIL FILLING AND REPLACEMENT

Machine chamber is empty with no oil. Please fill lubricant oil into new machines before running.

1. To fill lubricant oil : (Fig. 5 & 6)
   * Loosen Knob (A), fill in with lubricant oil or its equivalent such as Mobil #10 or Esso #32. Please fill the oil up between two level lines on oil Indicator (C) and tighten knob up.

2. To replace lubricant oil: (Fig. 3)

   * Loosen Knob (A), drain oil from the oil tank and tighten it up.
   * For smoothing machine, please replace lubricant oil after the first 4 weeks operation. There-after, replace oil every 4 months.

3. To replace oil filter : (Fig.7)
   * Take filter out and clean up every month. Replace with new filters if necessary.

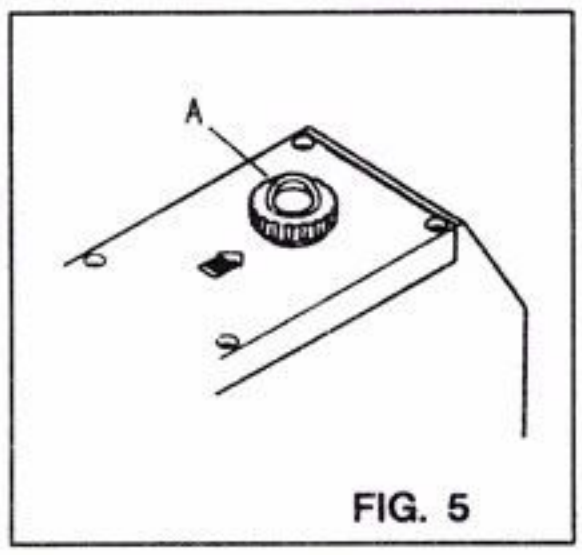

FIG. 5

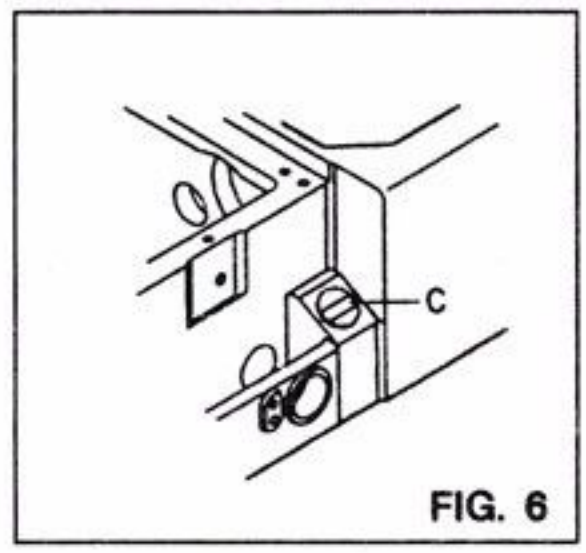

FIG. 6

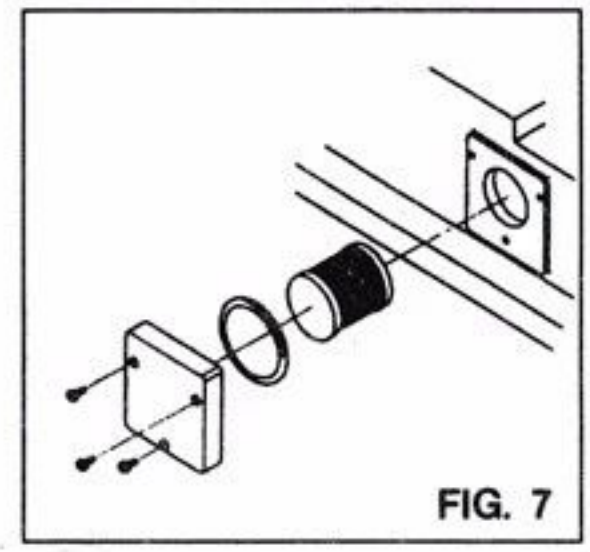
FIG. 7

針之更換

* 選用針之規格與尺寸請參照(表 2)

1. 旋鬆螺絲(A)並取下針. (圖 8)

TO REPLACE NEEDLES

* Please refer to Table 2 for proper needle sizes.

1. Loosen Screw (A) and take out the used needle. (Fig. 8)

好推手縫制商机

Table 2 （表 2）

Needle System 針規格	Needle Size 針號
ORGAN UO113	#11 - #18 #70 - #160)
ORGAN DV57	#11 – 18

when using high extension thread, move Lever(B) upward and vice versa.

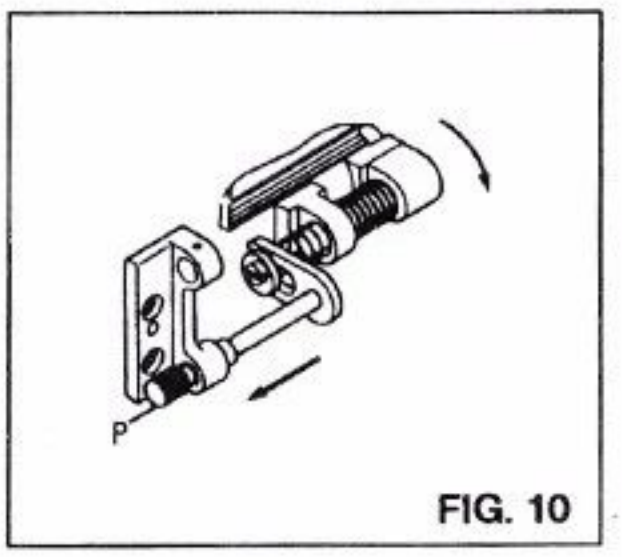

FIG. 10

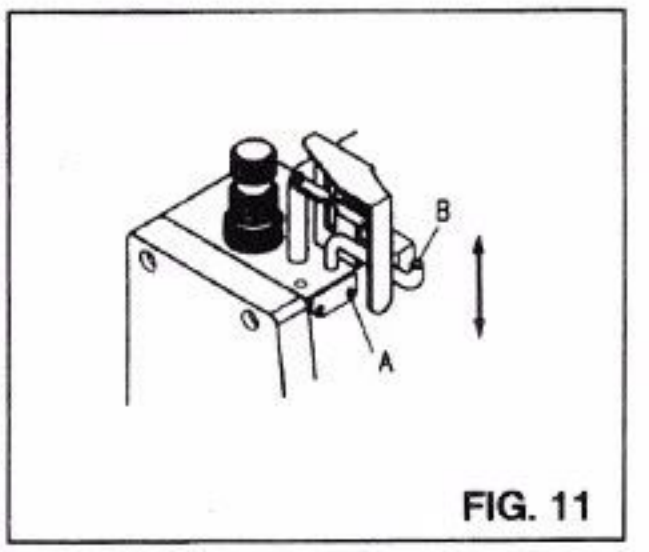

FIG. 11

縫距之調整 STITCH LENGTH ADJUSTMENT

首先確認馬達需關掉,然後壓下縫距調整按鈕(A),並轉動皮帶輪. 會感覺卡一聲,即按鈕卡住針距調整組,再轉動皮帶輪至所需之縫距欲調長縫距時. 將皮帶輪往順時針方向旋轉. 反之則小,再放放開此按鈕.(圖 12)

Be sure to turn off motor before adjust. Push stitch length Regulator Button (A) and turn pulley until the button lock in the stitch regulator . Then , turn pulley again to reach desired stitch length. Turn pulley clockwise for longer stitch length, vice versa. Then, release the Button. (Fig. 12)

押具壓力强度之調整 ADJUSTING THE PRESSURE OF PRESSER FOOT

在布料推送順暢且縫合完美之情況下,押具壓力儘量輕些

Pressure of the Presser Foot should be as light as possible, in case of cloth can be feeded and sewed smoothly

*鬆開螺母(A),轉動螺絲(B),調整其適當壓力後在鎖緊螺母(A).(圖 13)

* Loosen Nut (A), turn Screw(B) to adjust to proper pressure, then tighten Nut (A). (Fig. 13)

*順時針調整則壓力加強,反之則減少.

* Adjust clockwise to increase pressure, opposite to decrease.

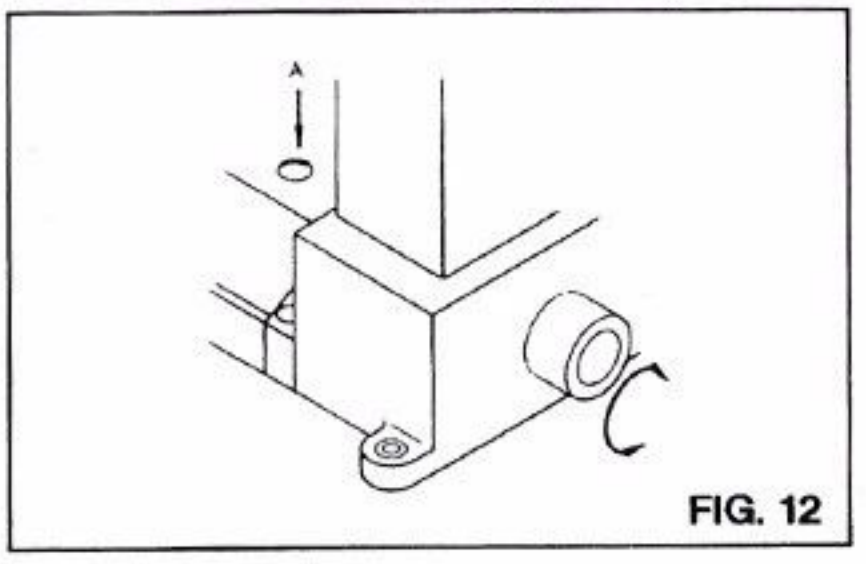

FIG. 12

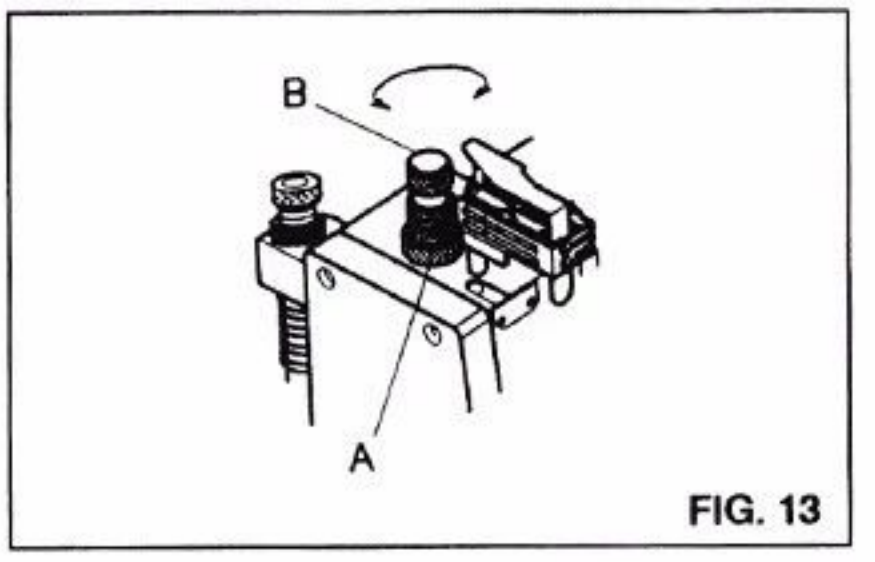

FIG. 13

好推手縫制商机

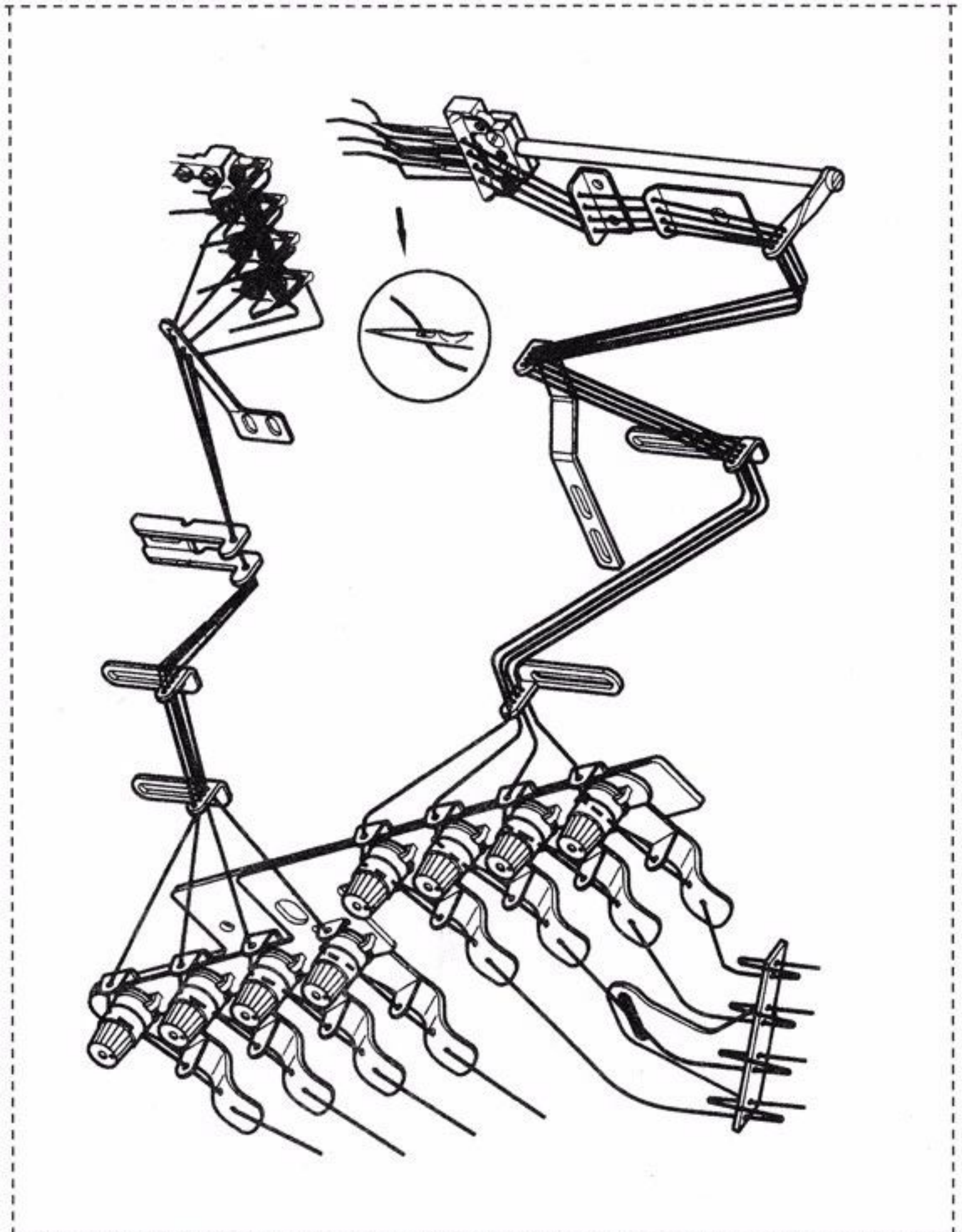

THREADING DIAGRAM FOR 4 Needles

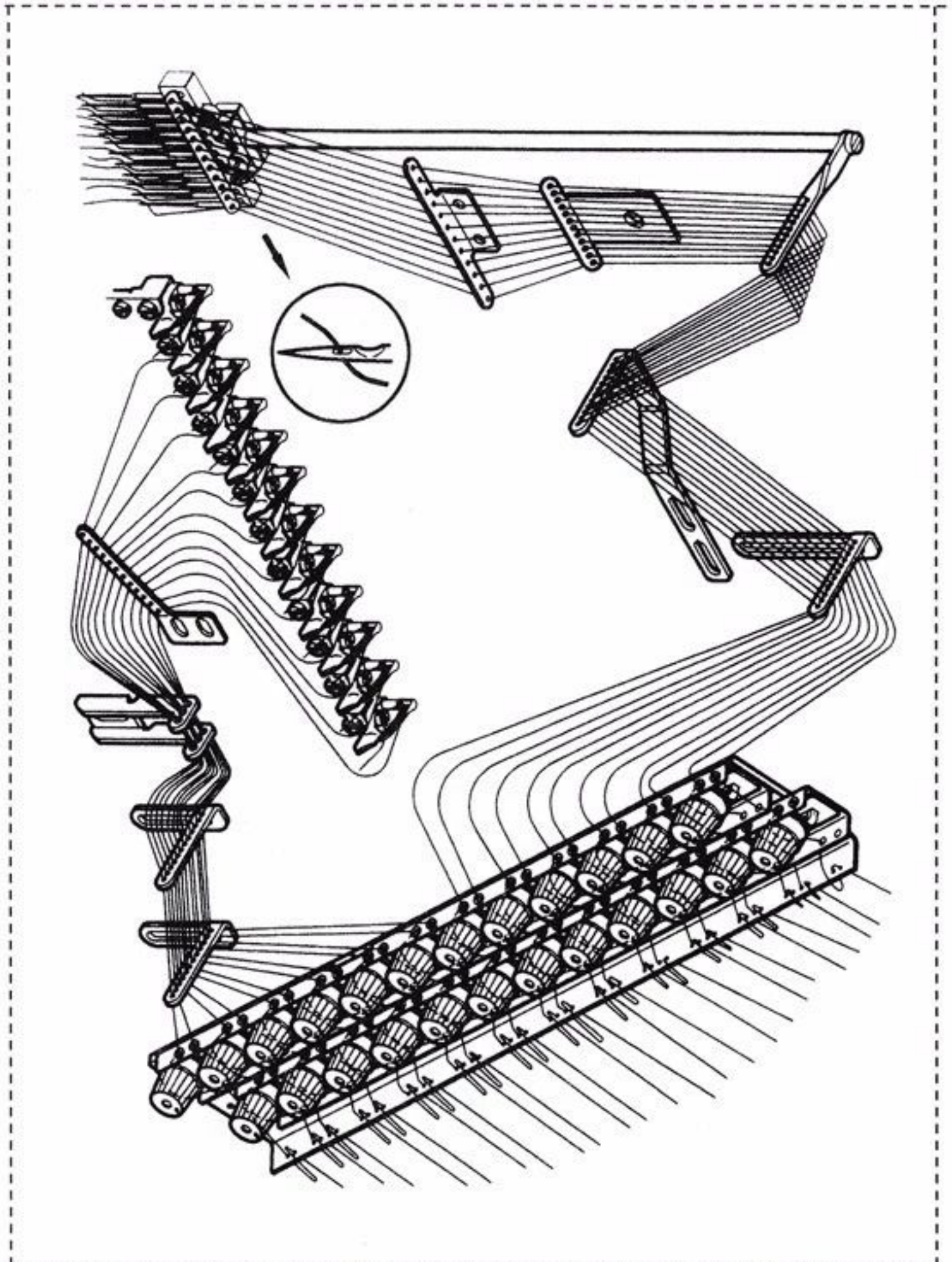

THREADING DIAGRAM FOR 12 Needles

好推手縫制商机

TABLE CUT – OUT – VC008 – T2

單位 / UNIT : MM
所有尺寸公差 / DIFFERENCE : ±2

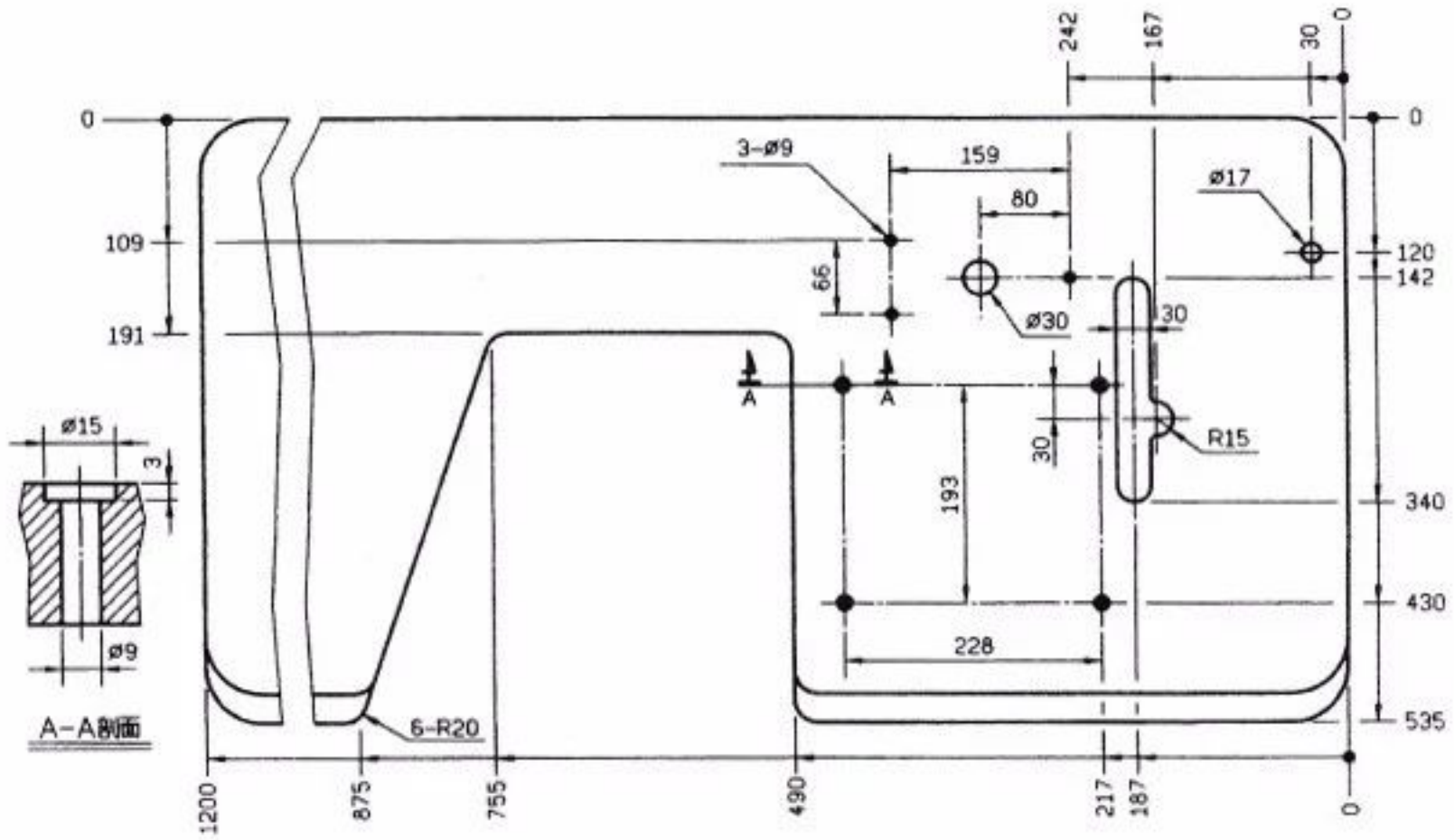

TABLE CUT – OUT – VC008 – T1

單位 / UNIT : MM
所有尺寸公差 / DIFFERENCE : ±2

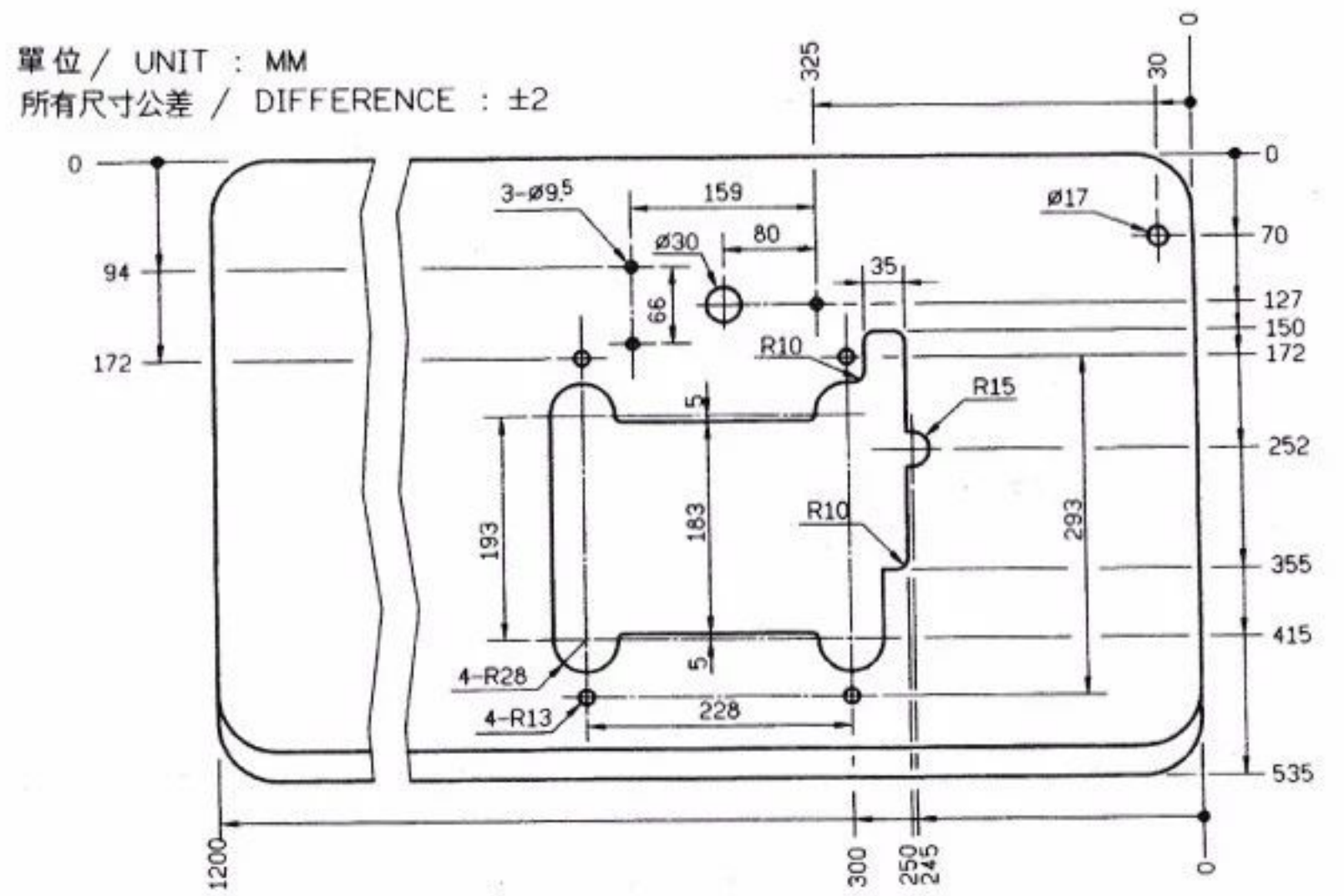

好推手缝制商机

TABLE CUT – OUT – VC008 – T4

單位 / UNIT : MM
所有尺寸公差 / DIFFERENCE : ±2

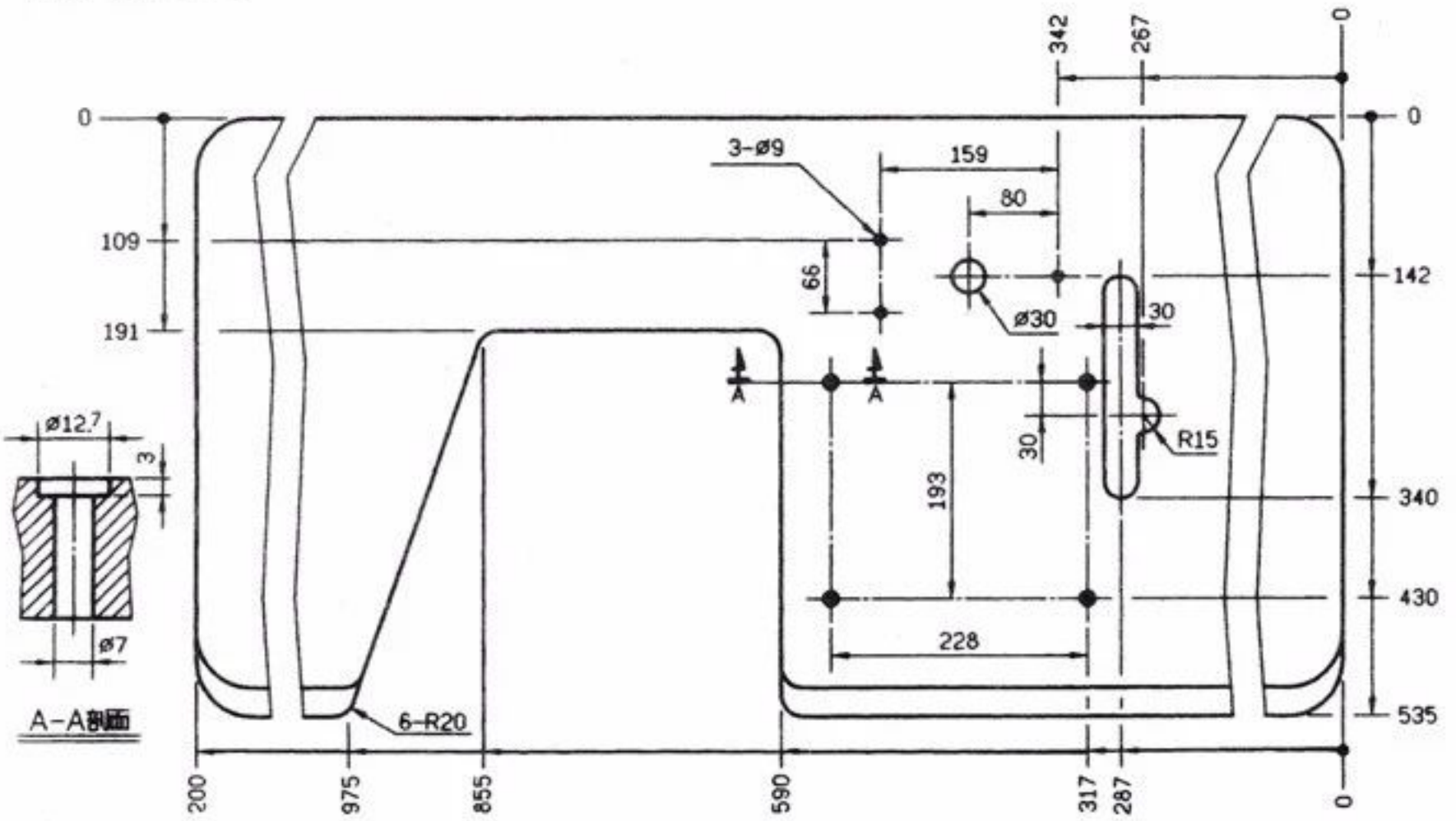

TABLE CUT – OUT – VC008 – T3

單位 / UNIT : MM
所有尺寸公差 / DIFFERENCE : ±2

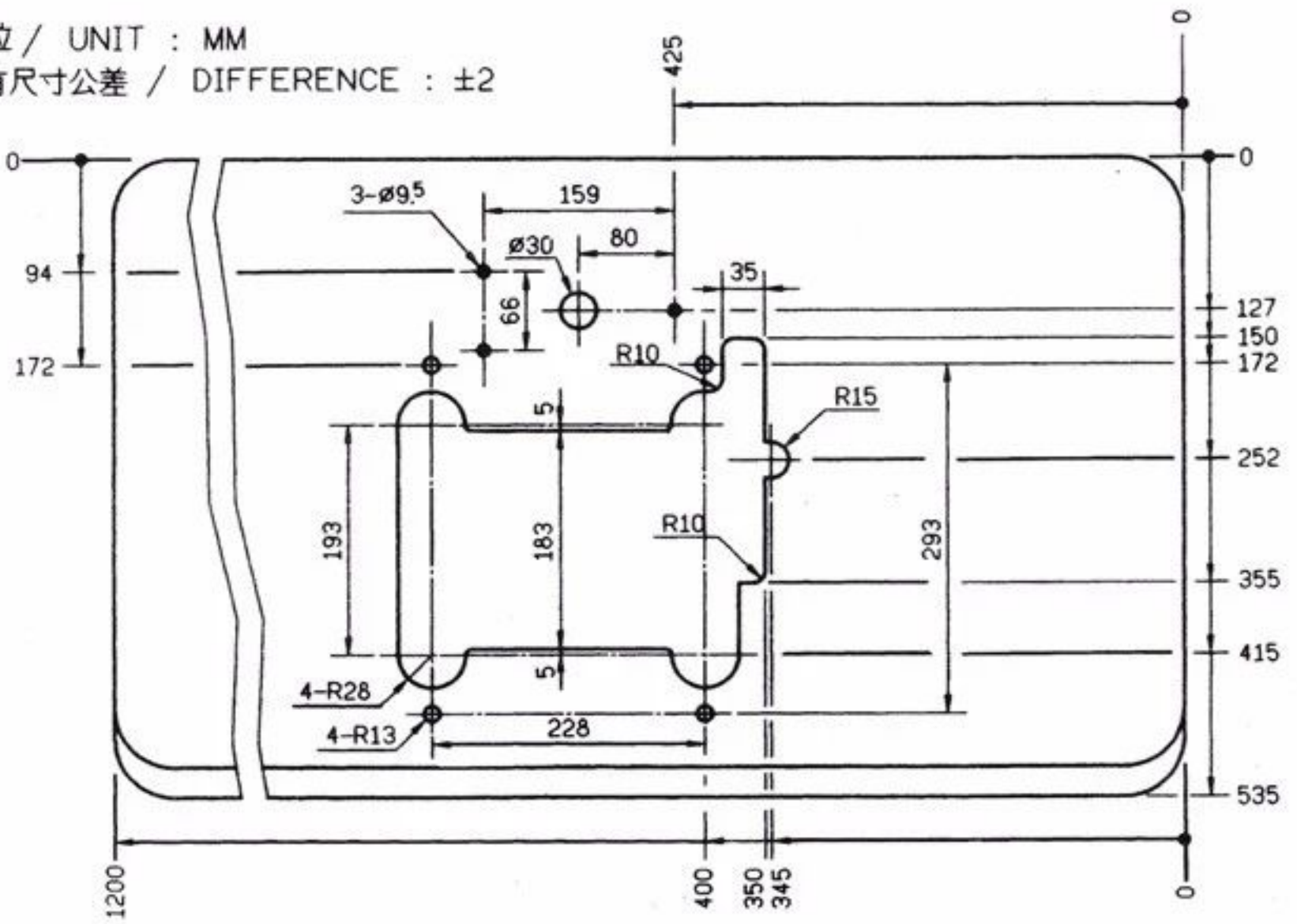

好推手缝制商机

TABLE CUT – OUT – VC008 – T6

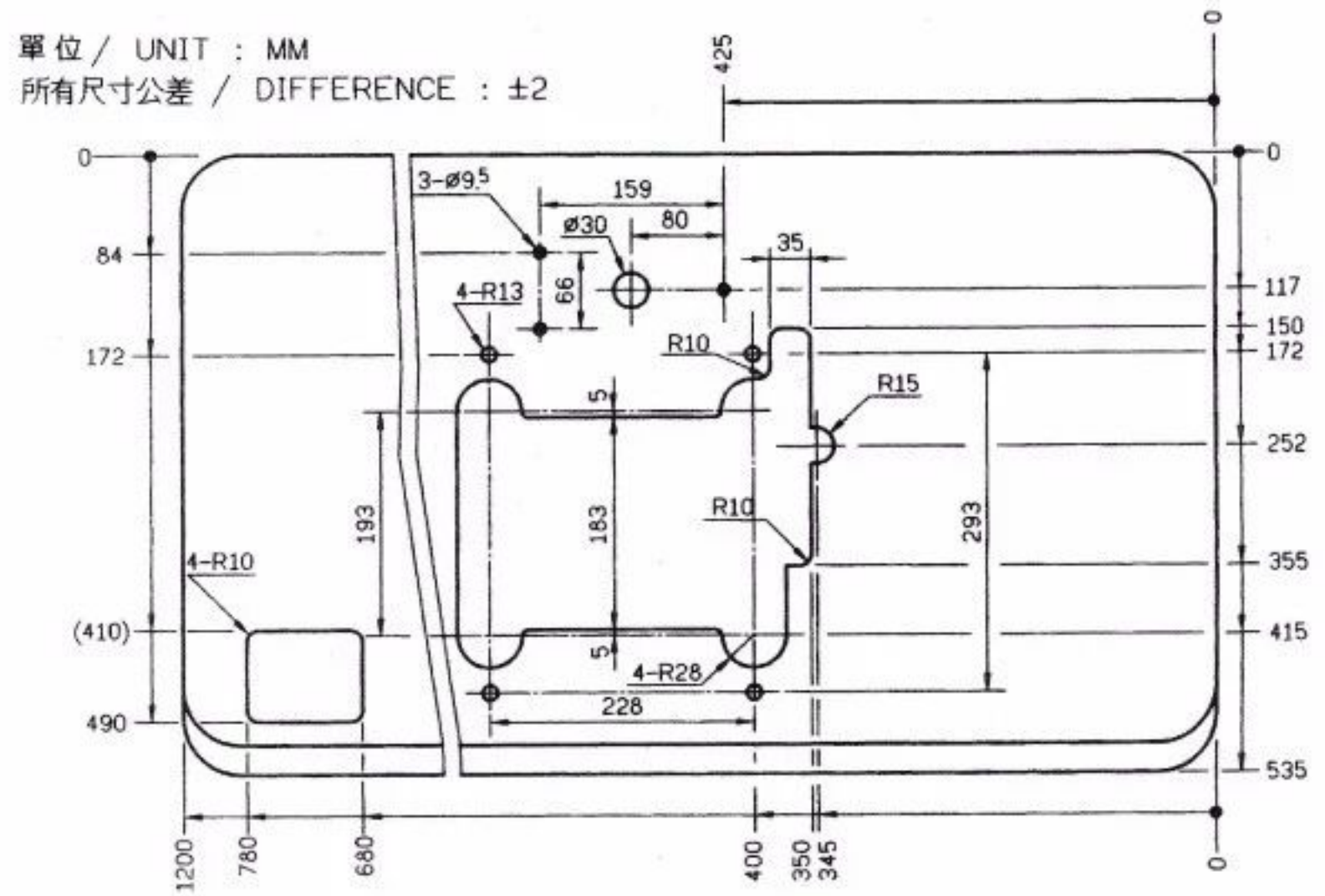

TABLE CUT – OUT – VC008 – T5

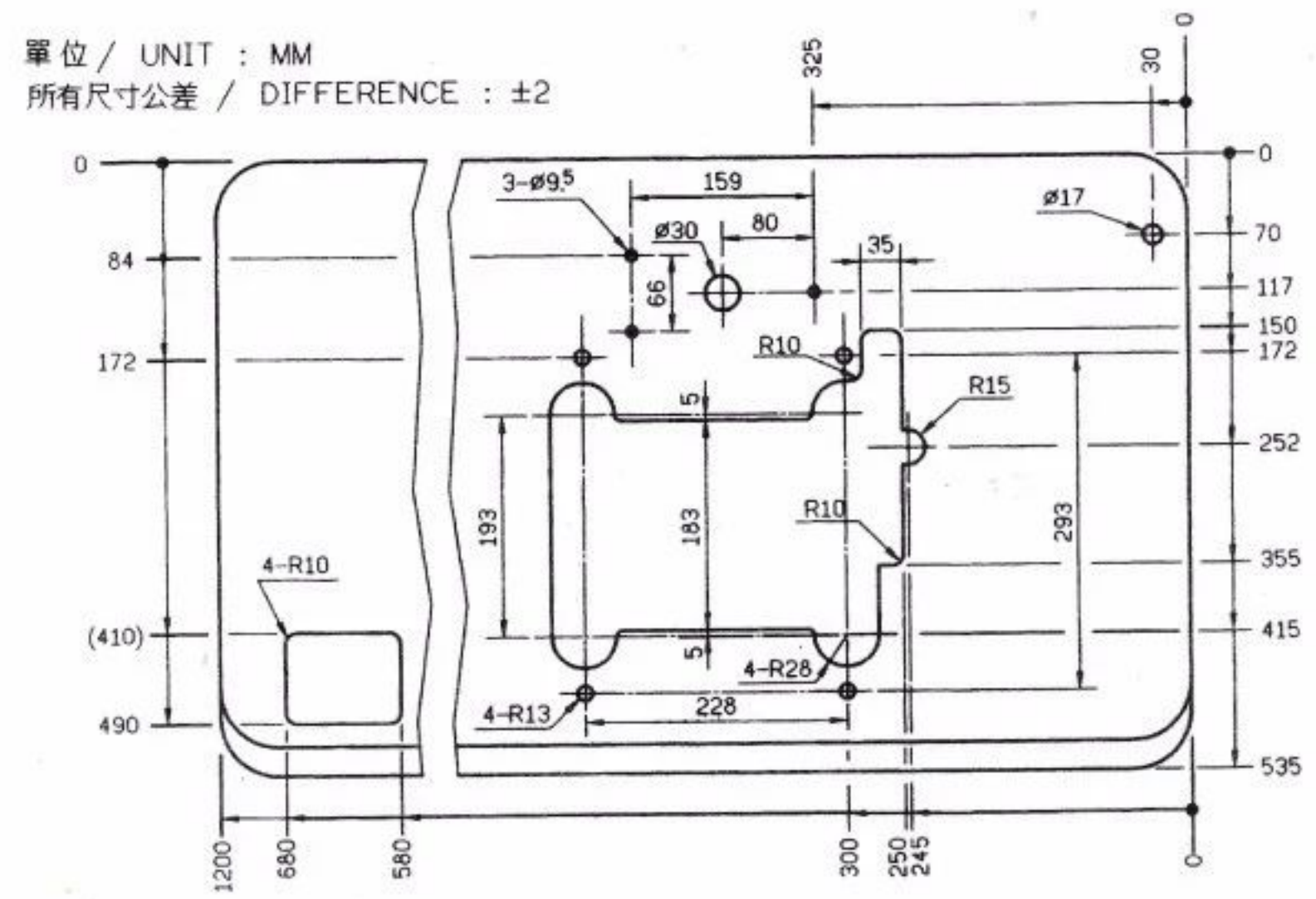

好推手缝制商机

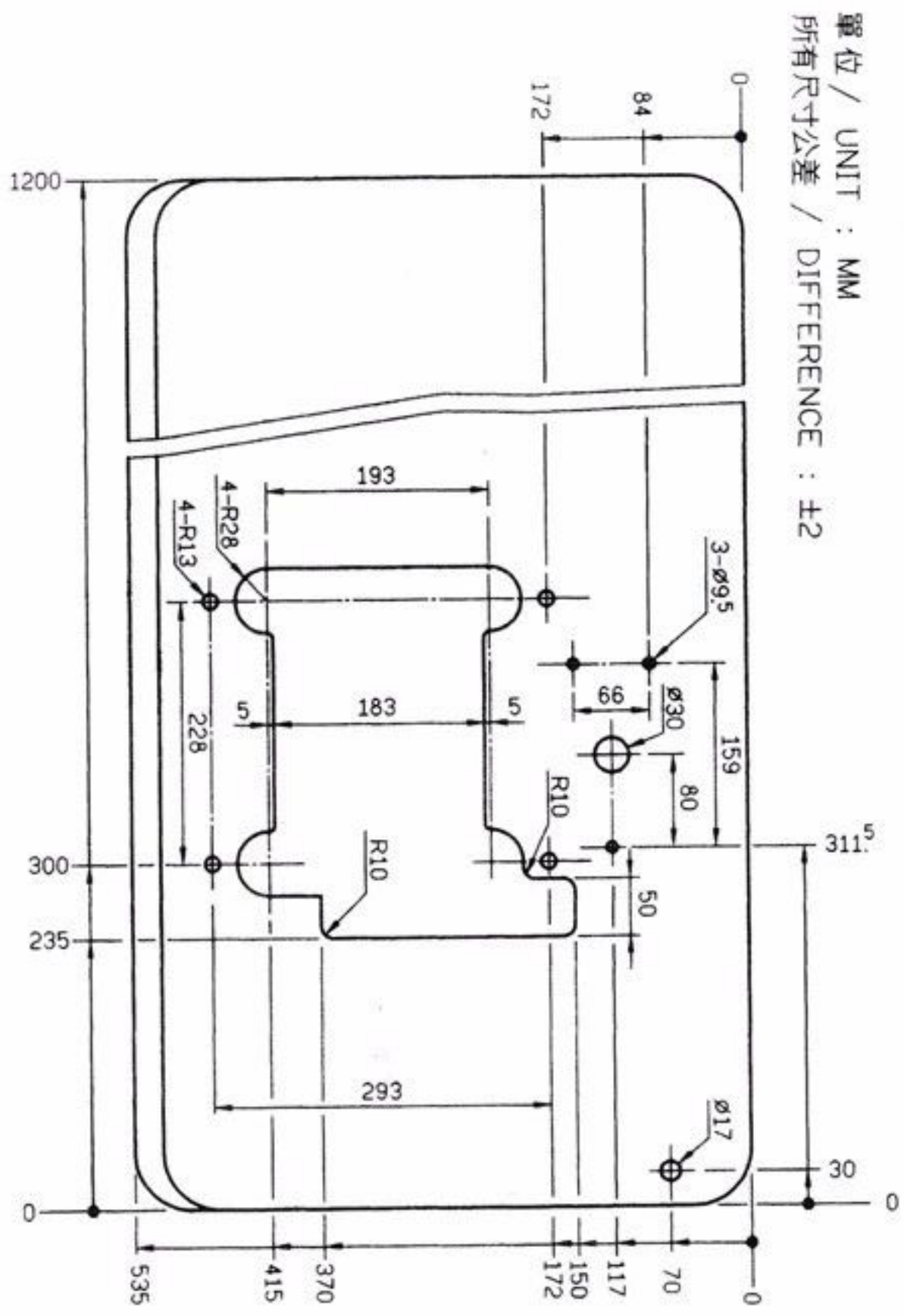

MODEL	MAX SPEED (S.P.M)	NOSE LEVEL dB(A)	AVAILABLE DEVICE
VC008-04064P	4200	78.6	VCE, VWL
VC008-04085P	4200	78.6	VCE, VWL
VC008-04095P	4200	78.6	VCE, VWL
VC008-04106P	4200	78.6	VCE, VWL
VC008-04127P	4200	78.6	VCE, VWL
VC008-12048P	4200	80.5	VCE, VWL
VC008-12064P	4200	80.5	VCE, VWL
VC008-04048-245P/VSF	4200	78.6	
VC008-04064-191P/VSF	4200	78.6	
VC008-04064-245P/VSF	4200	78.6	
VC008-04264P/VMR	2000	78.6	
VC008-12048P/VPT	4200	80.5	
VC008-04064P/VPL	4200	80.5	
VC008-04085P/VPL	4200	78.6	
VC008-12048P/VPL	4200	80.5	
VC008-12064P/VPL	4200	80.5	

Measurement point: At a distance of 1 meter form the surface of the machinery and at height of 1.6 meter from the floor.

TABLE CUT – OUT – VC008 – T7

ATTACHED I

好推手縫制商初

重要安全事項說明

1. 搬運作業

(1) 使用全罩二片式的保麗龍將機器包裝防護.

(2). 放入紙箱內.

(3). 用手推車或二人用雙手抬動搬運.

2. 儲存作業

(1). 機器不使用時, 應用防塵將其罩上.

(2). 避免儲存於高於 45 ° C 以上的高溫.

3. 作業中

機器不要在高於 40 ° C 以上的溫度工作.

4. 警告

在貼有警告標示之處請注意.

1. 機械作動部份, 請注意裝上保護裝置.

2. 穿線, 換線, 調整, 清潔時請注意關閉電源.

IMPORT SAFETY INSTRUCTION

1. Transportation

(1). The machine packed with two piece covers that made of expanded polystyrene to protect it .

(2). Put the machine into a carton.

(3). Use a cart or by two men's hands to move it.

2. Storage

(1). The machine must use duster – cover to cover it when it did not work.

(2). The machine avoid to storage in the temperature more than 45 ° C.

3. Working

The machine doesn't work over 40 ° C.

4. Warning

Pay attention to this warning advice as follow:

a. Working area is dangerous.

b. Never touch the needle if the machine is still running.

c. Be careful if you infeed fabric.

d. Do not insert your finger between needle and roller for transportation on fabric.

Pay attention to the warning sticker.

a. Movable parts must be enclosed with guard when you operate.

b. Pull out the plug from socket when you adjust, thread, change bobbin and needle clean.

好推手縫制商机

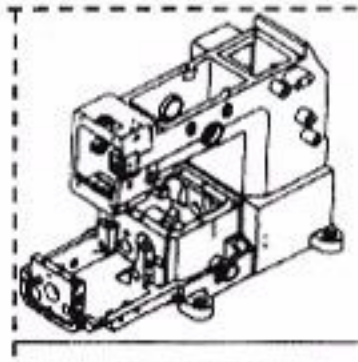
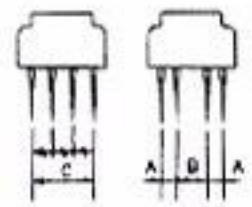

MODEL	SUB-CLASS	NEEDLE GAUGE	NEEDLE HOLDER	NEEDLE PLATE	FEED DOG	PRESSER FOOT	RETAINER HOLDER	LOOPER	NEEDLE GUARD	LOOPER HOLDER	LOOPER BRACKET	NEEDLE Uo113
機型	規格	針距	針座	針板	送具	押具	撥線軸	勾針	護針片	勾針座	勾針座支架	針
VC008-02/VMR	064P	1/4"	M9002	E9002D	D9002	P9002	R9002	VE51	VE49	L9002	VE11	#11-#14
VC008-04	064P	3/4"	M9004	E9004D	D9004	P9004	R9004	VE51	VE49	L9004	VE11	#11-#14
	085P	1"	M9104	E9104D	D9104	P9104	R9104	VE51	VE49	L9104	VE11	#11-#14
	095P	1-1/8"	M9204	E9204D	D9204	P9204	R9204	VE51	VE49	L9204	VE11	#11-#14
	106P	1-1/4"	M9304	E9304D	D9304	P9304	R9304	VE51	VE49	L9304	VE11	#11-#14
	127P	1-1/2"	M9404	E9404D	D9404	P9404	R9404	VE51	VE49	L9404	VE11	#11-#14
VC008-04/VUT	064P	3/4"	M9004	E9004D	D9004P	P9004	R9004	VE51	VE49	L9004	VE11	#11-#14
	085P	1"	M9104	E9104D	D9104P	P9104	R9104	VE51	VE49	L9104	VE11	#11-#14
	095P	1-1/8"	M9204	E9204D	D9204P	P9204	R9204	VE51	VE49	L9204	VE11	#11-#14
	106P	1-1/4"	M9304	E9304D	D9304P	P9304	R9304	VE51	VE49	L9304	VE11	#11-#14
	127P	1-1/2"	M9404	E9404D	D9404P	P9404	R9404	VE51	VE49	L9404	VE11	#11-#14
VC008-0448	191P	3/16-3/4-3/16"	M9504A	E9504E	D9504A	P9504A	R9504A	VE51	VE49	L9504A	VE11	#11-#14
	222P	3/16-7/8-3/16'	M9204A	E9204E	D9204A	P9204A	R9204A	VE51	VE49	L9204A	VE11	#11-#14
	254P	3/16-1-3/16"	M9404A	E9404E	D9404A	P9404A	R9404A	VE51	VE49	L9404A	VE11	#11-#14
VC008-0464	191P	1/4-3/4-1/4"	M9304A	E9304E	D9304A	P9304A	R9304A	VE51	VE49	L9304A	VE11	#11-#14
	127P	1/4-1/2-1/4"	M9004A	E9004E	D9004A	P9004A	R9004A	VE51	VE49	L9004A	VE11	#11-#14
	254P	1/4-1-1/4"	M9104A	E9104E	D9104A	P9104A	R9104A	VE51	VE49	L9104A	VE11	#11-#14
VC008-06/VPL	048P	3/16"	M9012	E9012	D9012	P9412	R9012	VE51	VE49	L9012	VE11P	#11-#14
	064P	1/4"	M9112	E9112	D9112	P9512 P9512A	R9112	VE51	VE49	L9112	VE11P	#11-#14
VC008-12	048P	3/16"	M9012	E9012	D9012	P9012	R9012	VE51	VE49	L9012	VE11P	#11-#14
	050P	5mm	M9612	E9612	D9612	P9612	R9612	VE51	VE49	L9612	VE11P	#11-#14
	064P	1/4"	M9112	E9112	D9112	P9112	R9112	VE51	VE49	L9112	VE11P	#11-#14

規格件表 • CONVERSION CHART

好推手縫制商机

規格件表 • CONVERSION CHART

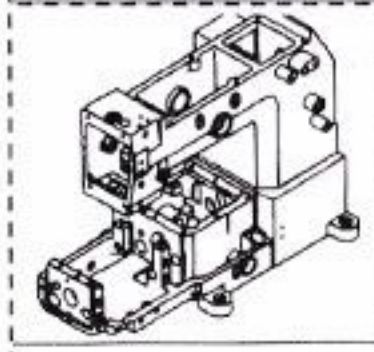
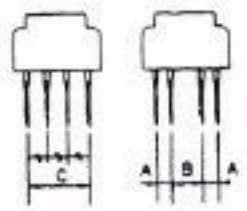
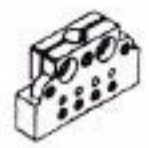

MODEL	SUB-CLASS	NEEDLE GAUGE	NEEDLE HOLDER	NEEDLE PLATE	FEED DOG	PRESSER FOOT	RETAINER HOLDER	LOOPER	NEEDLE GUARD	LOOPER HOLDER	LOOPER BRACKET	NEEDLE Uo113
機型	規格	針距	針座	針板	送具	押具	撥線軸	勾針	護針片	勾針座	勾針座支架	針
VC008-12/VUT	050P	50mm	M9612	E9612	D9612P	P9612	R9612	VE51	VE49	L9612	VE11P	#11-#14
VC008-12/VPQ	048P	3/16"	M9012	E9212	D9212	P9212	R9012	VE51	VE49	L9012	VE11P	#11-#14
	064P	1/4"	M9112	E9312	D9312	P9312	R9112	VE51	VE49	L9112	VE11P	#11-#14
VC008-12/VPL	064P	1/4"	M9112	E9112	D9112	P9512B	R9112	VE51	VE49	L9112	VE11P	#11-#14
VC008-13	032P	1/4-1/8-1/8-1/4"	M9113	E9113	D9113	P9113	R9113	VE51P		L9113	VE11P	#11-#14
	064P	1/4'	M9213	E9213	D9213	P9213	R9213	VE51	VE49	L9213	VE11P	#11-#14
VC008-04A	032P	1/4-1/8-1/8-1/4"	M9113	E9113	D9113	P9113	R9113	VE51*4	VE49	L9002*4	VE11Q	#11-#14
VC008-4A	064P	1/4"	M9213	E9213	D9213	P9213	R9213	VE51*4	VE49	L9002*4	VE11Q	#11-#14
VC008-12A	032P	1/4-1/8-1/8-1/4"	M9113	E9113	D9113	P9113	R9113	VE51*6	VE49	L9002*6	VE11Q	#11-#14
VC008-12	064P	1/4"	M9213	E9213	D9213	P9213	R9213	VE51*6	VE49	L9002*6	VE11Q	#11-#14

好得利三針縫紉機

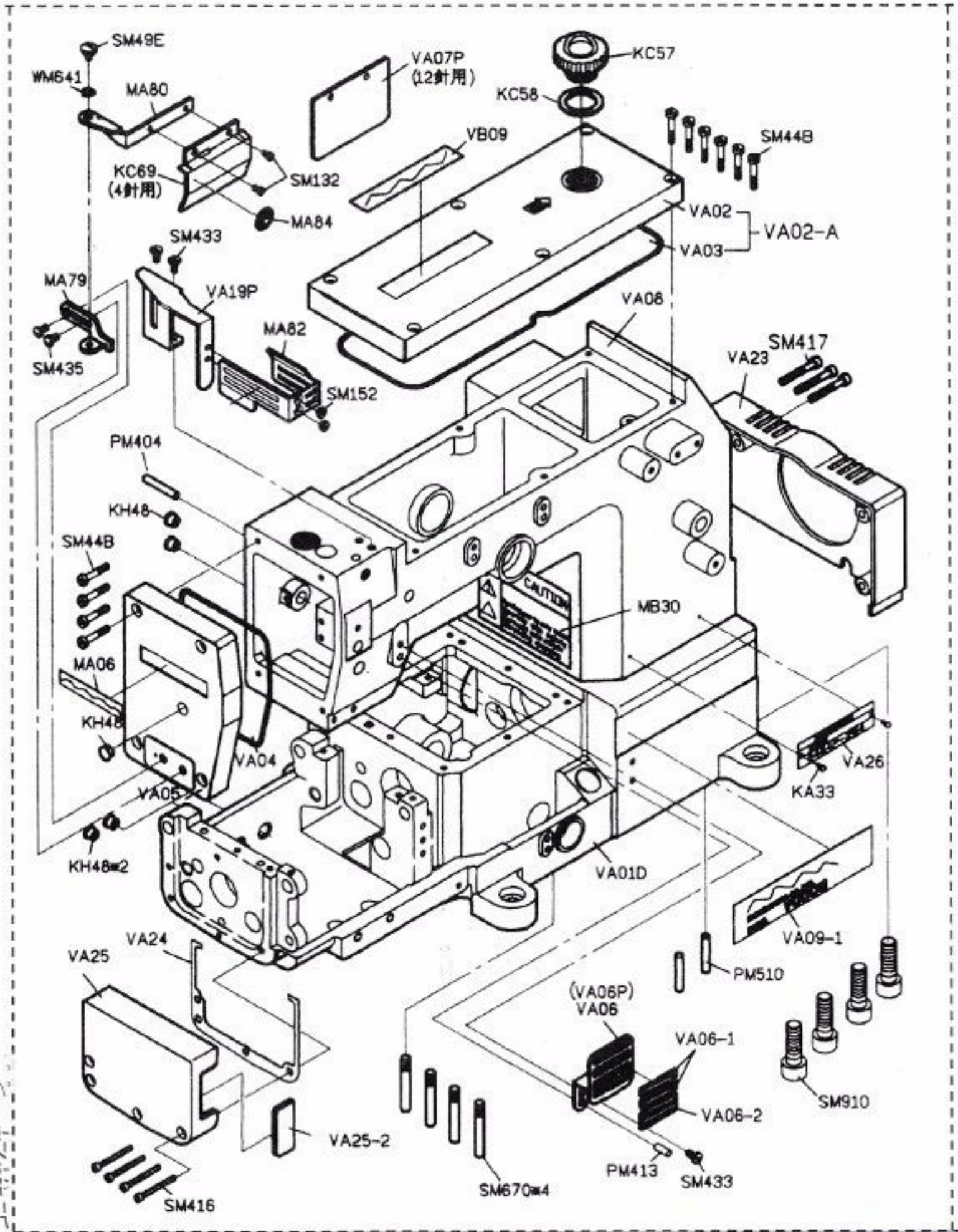

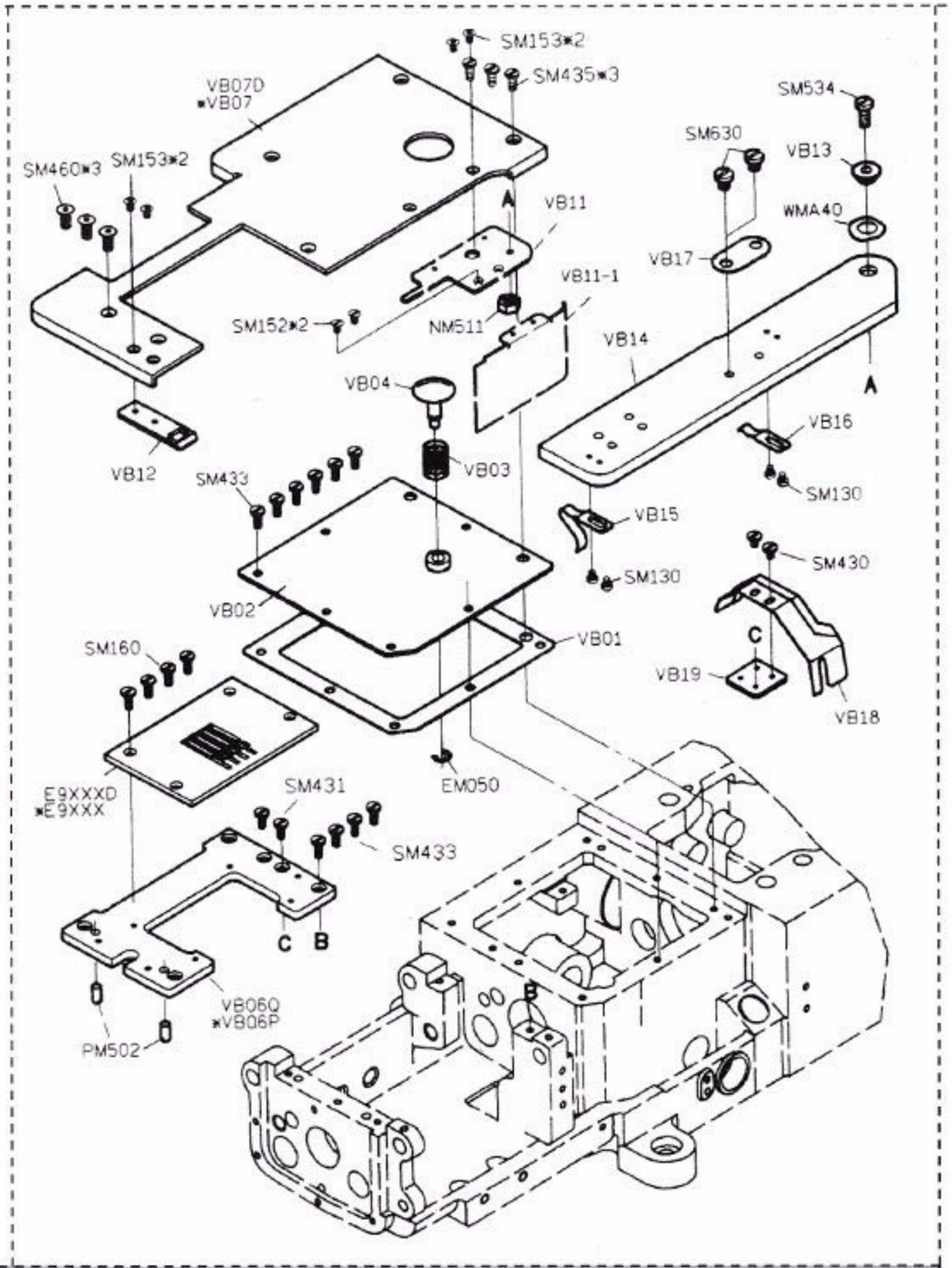

PARTS LIST FOR VA GROUP

PARTS LIST FOR VB GROUP

PARTS LIST FOR VC GROUP

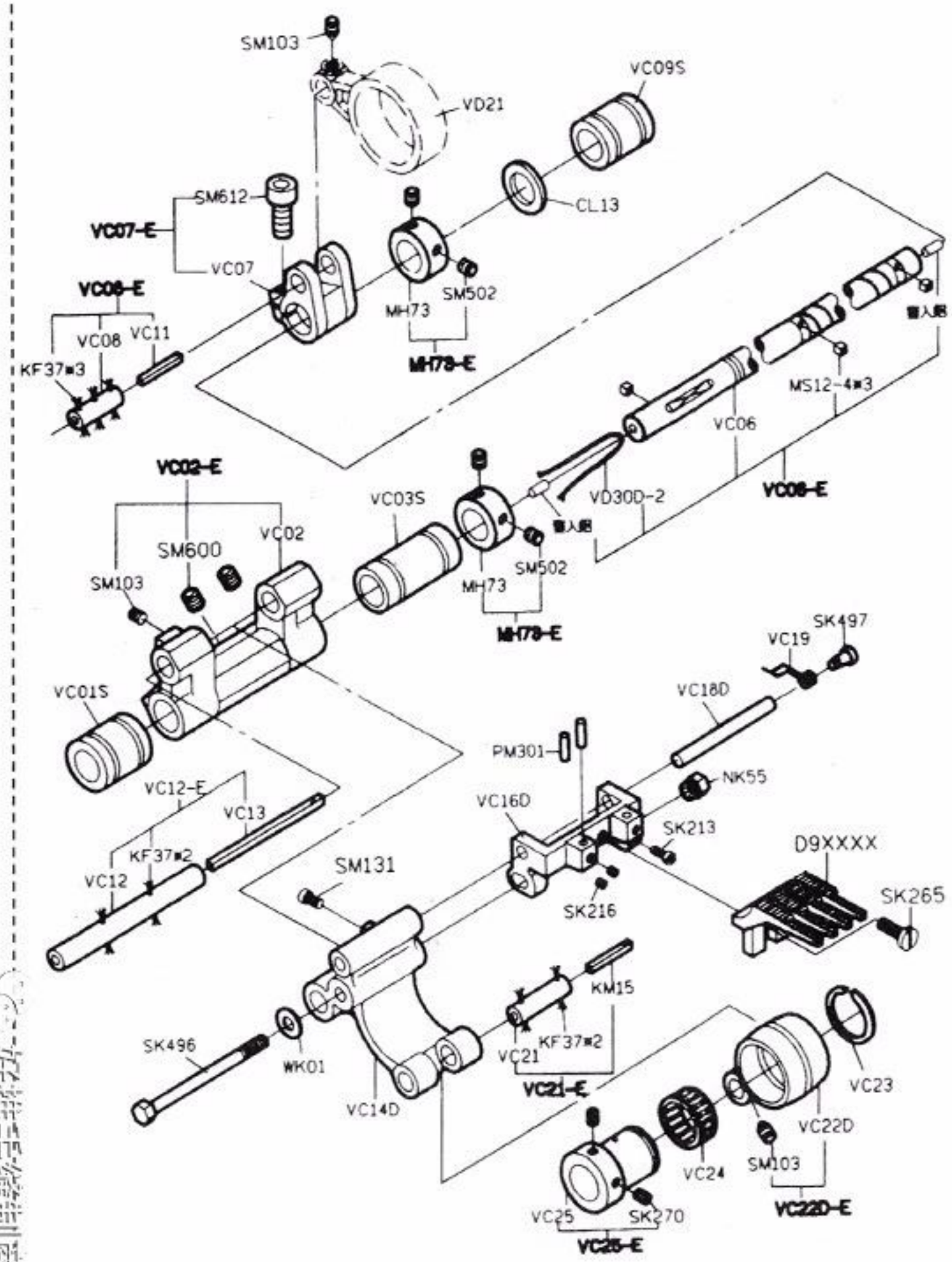

PARTS LIST FOR VD GROUP

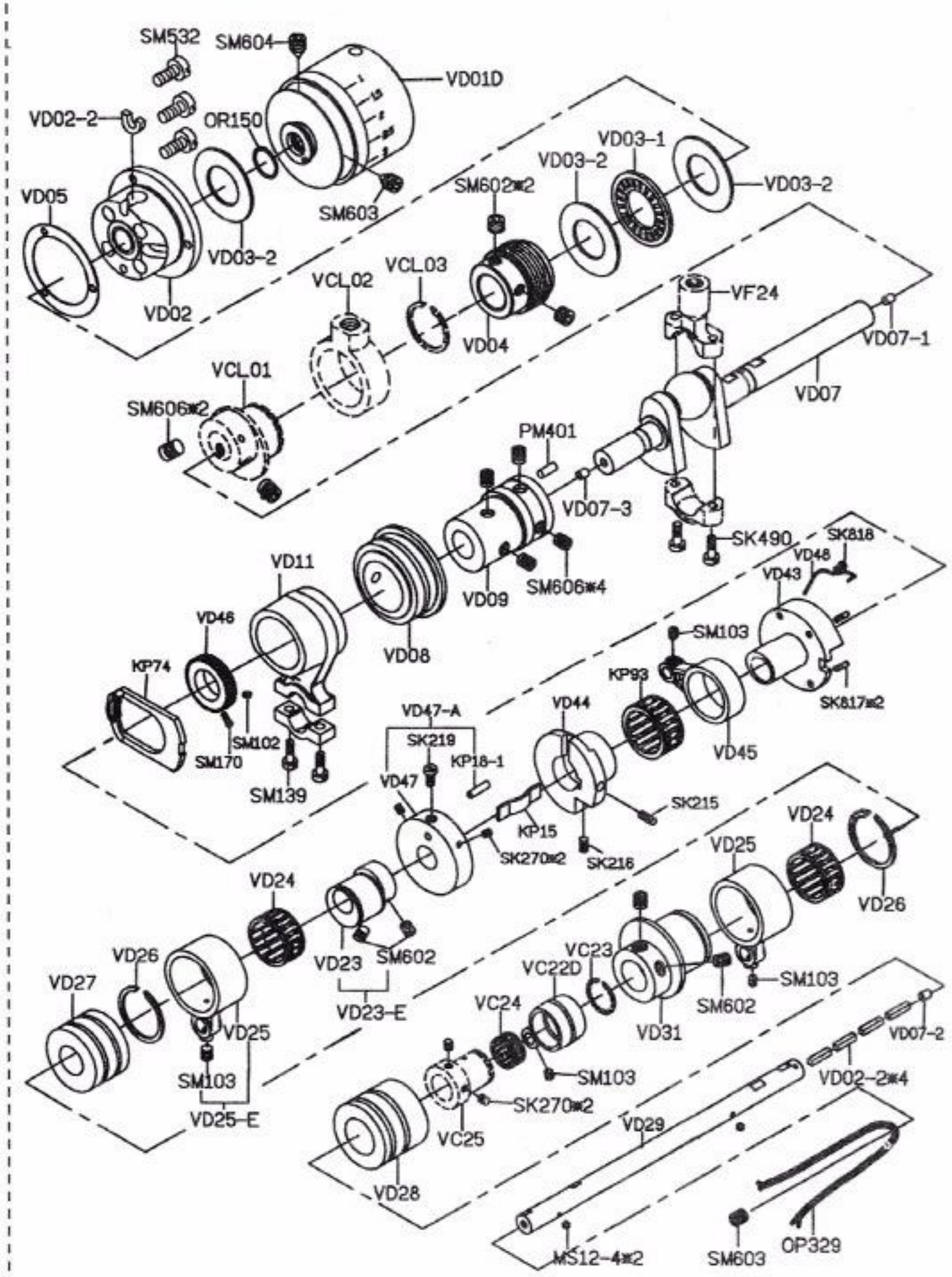

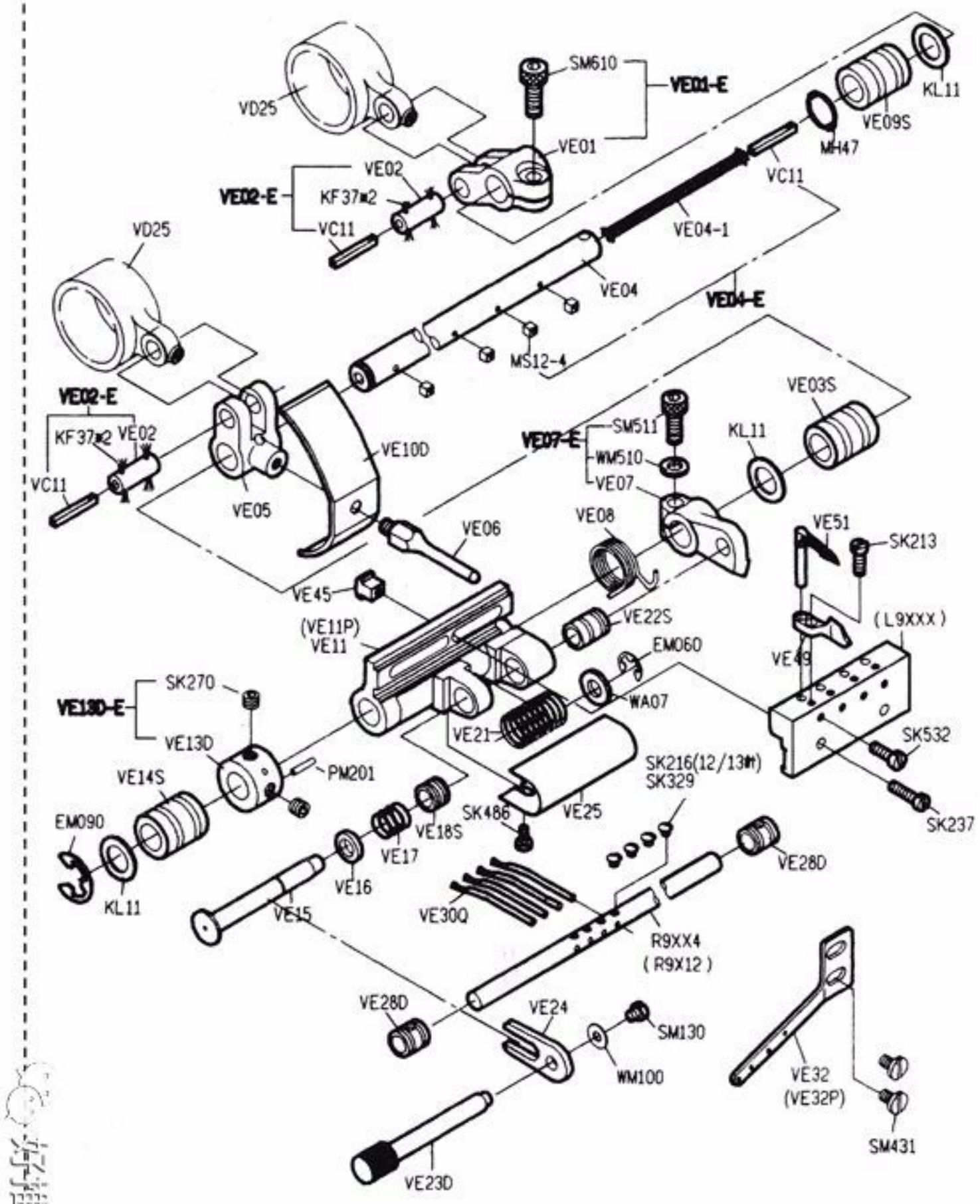

PARTS LIST FOR VE (1) GROUP

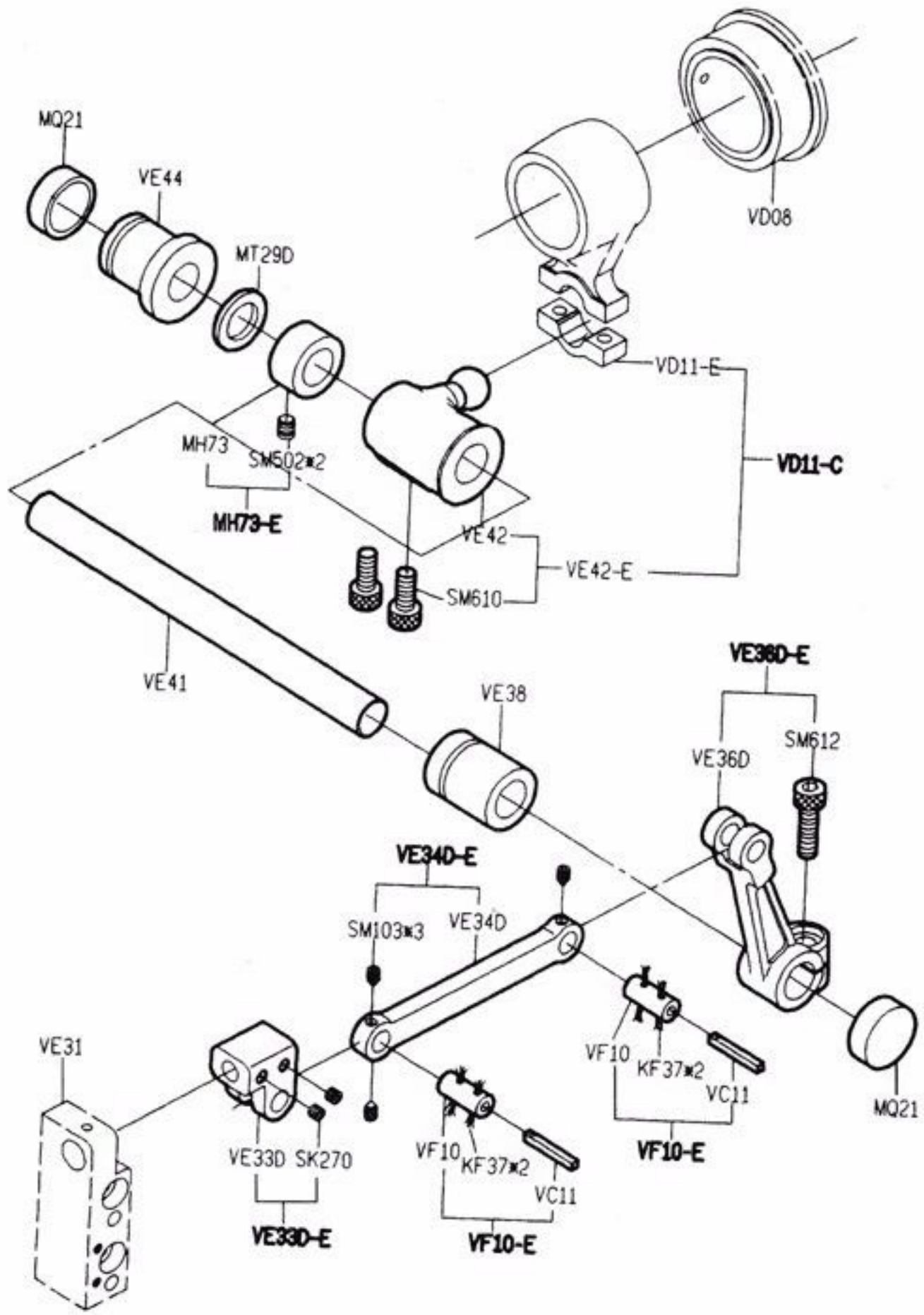

PARTS LIST FOR VE (2) GROUP

©深圳市海利普制高科

PARTS LIST FOR VE (3) GROUP - 13 Needles

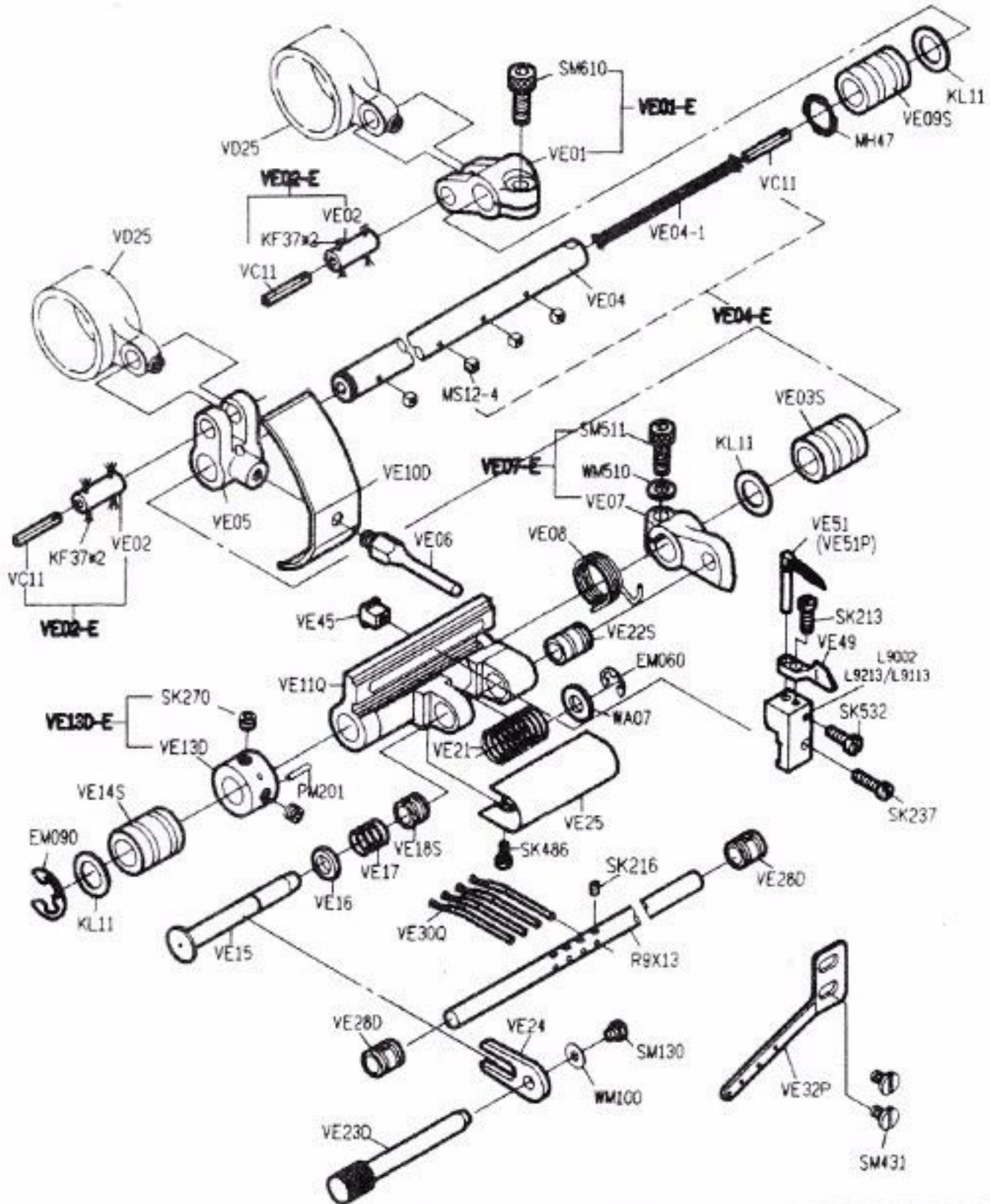

MODEL	HOLDER	LOOPER	GUARD	REMARK
13032	L9113	VE51P	X	13 needles
13064	L9213	VE51	VE49	13 needles
04A32	L9002*4	VE51	VE49	4 to 13 needles
12A32	L9002*6	VE51	VE49	12 to 13 needles
04A64	L9002*4	VE51	VE49	4 to 13 needles
12A64	L9002*6	VE51	VE49	12 to 13 needles

PARTS LIST FOR VE (4) GROUP - 13 Needles

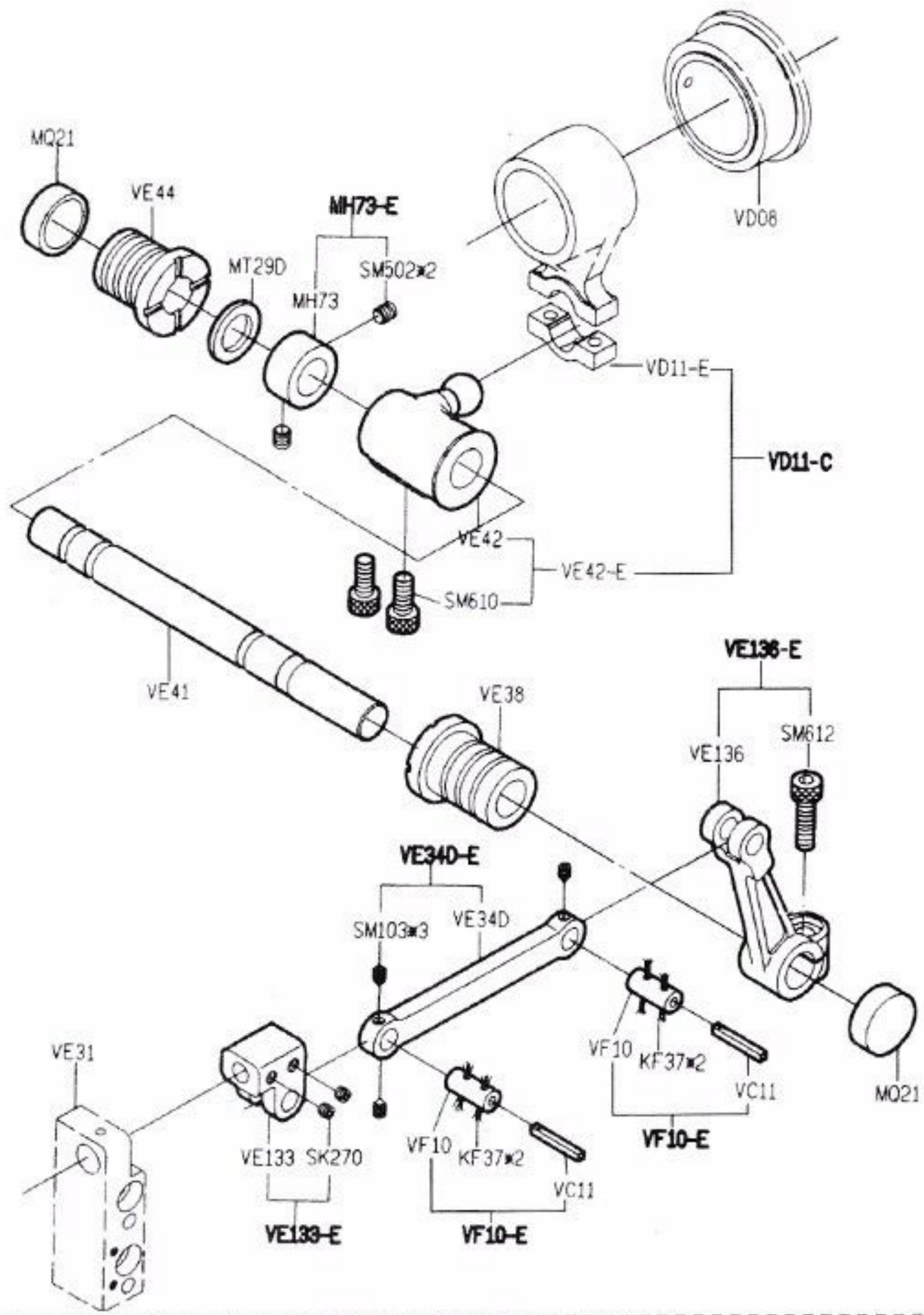

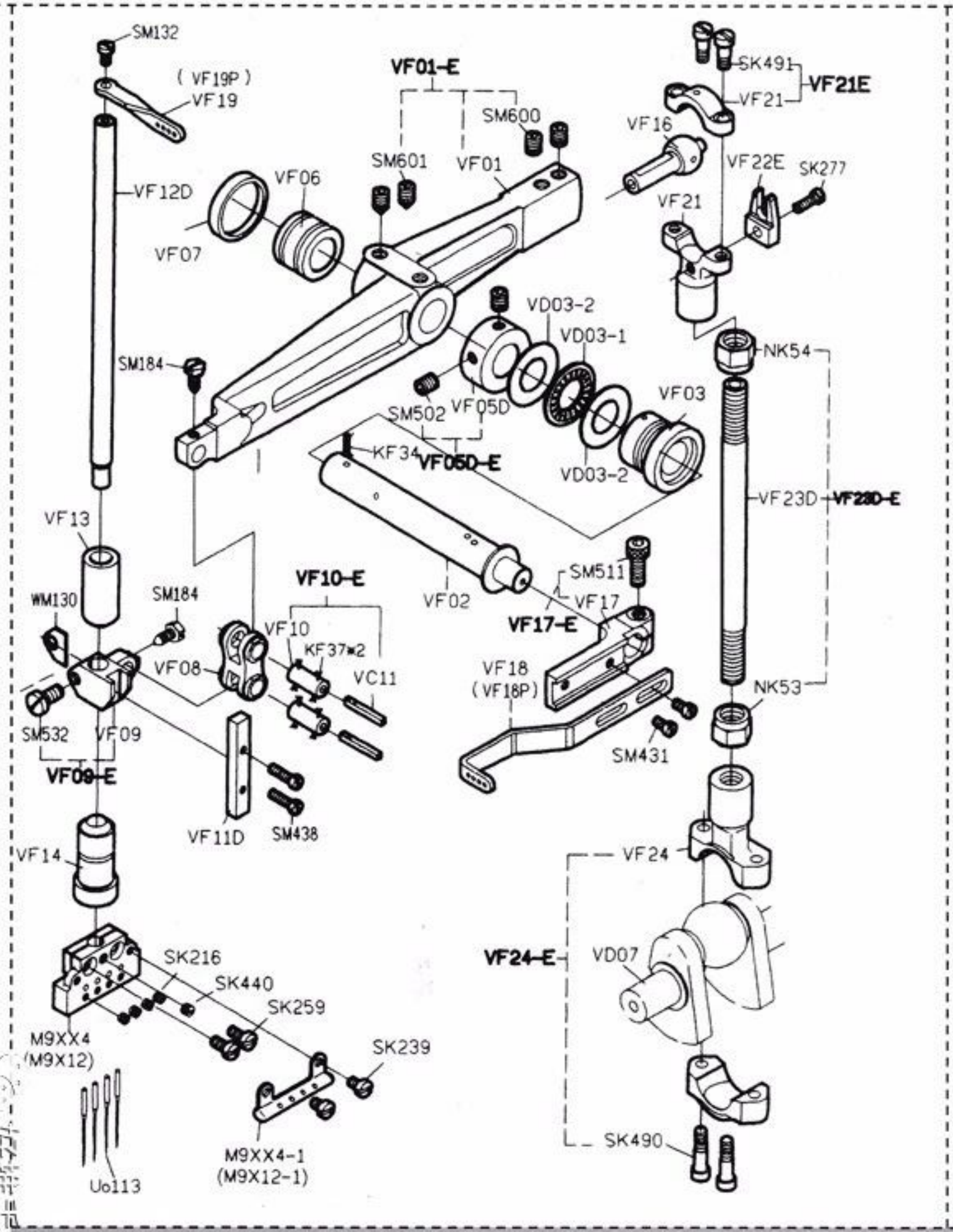

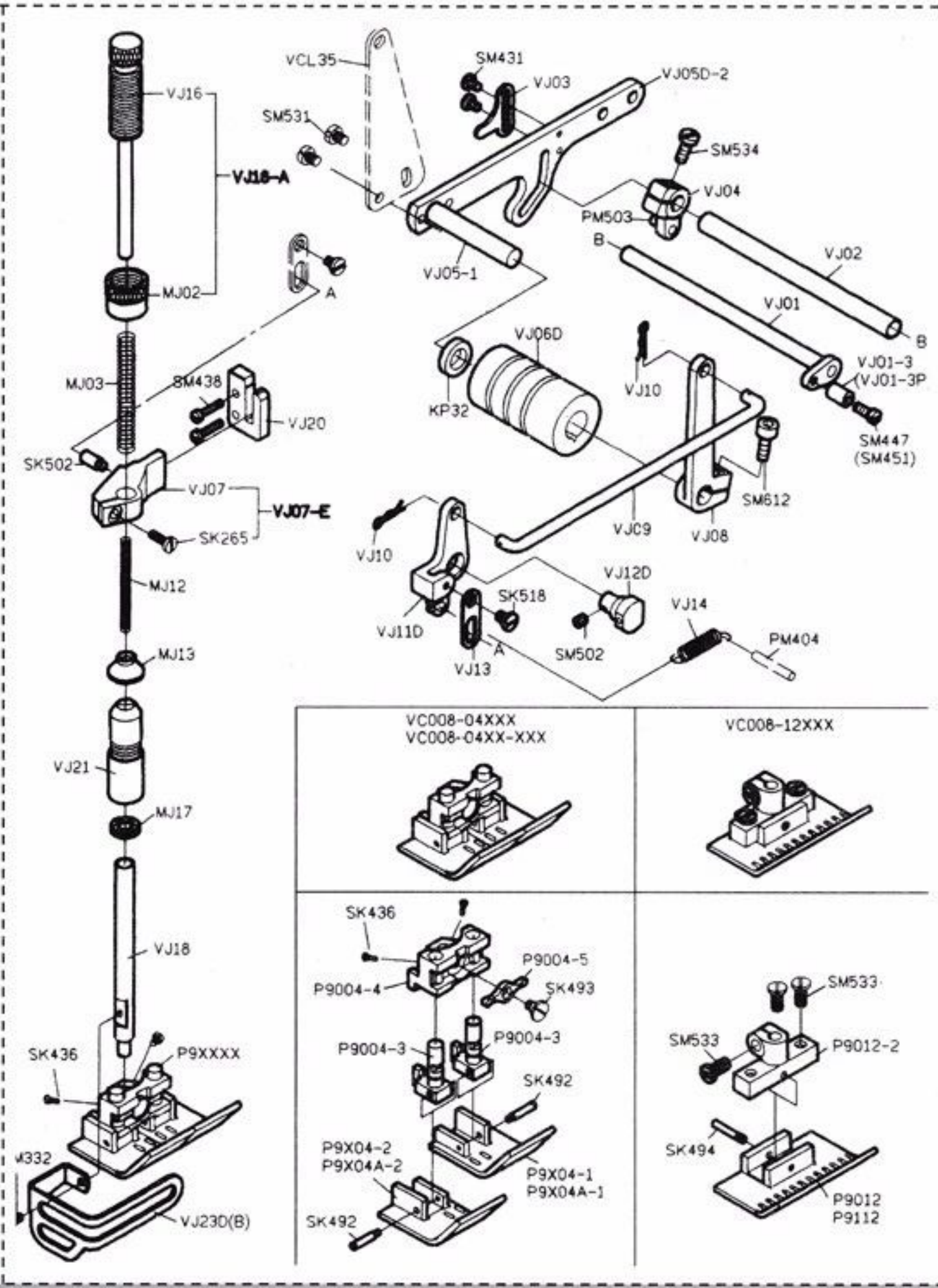

PARTS LIST FOR VF GROUP

PARTS LIST FOR VJ-D GROUP

PARTS LIST FOR VK (1) GROUP - 4 Needles

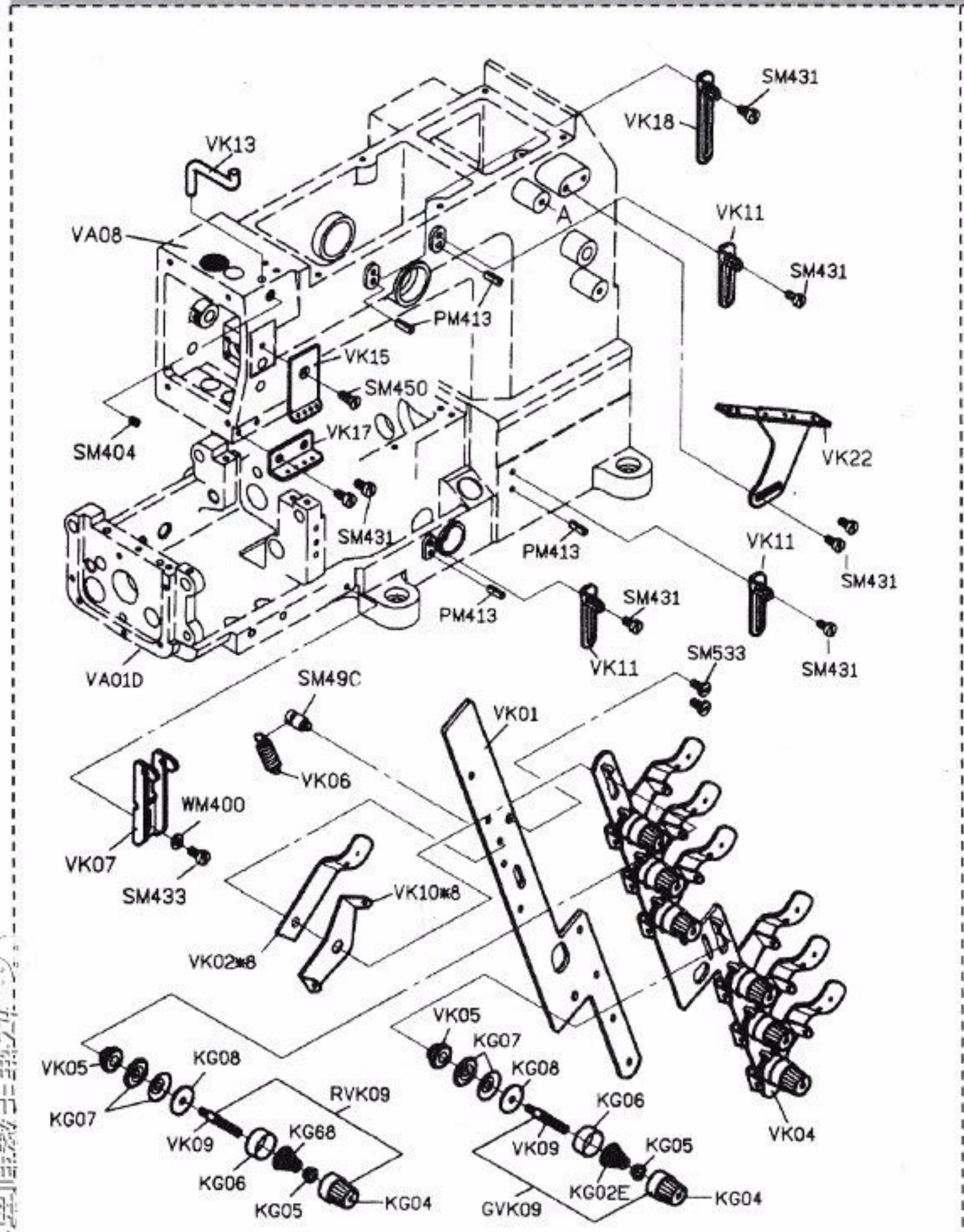

PARTS LIST FOR VK (2) GROUP - 12 Needles

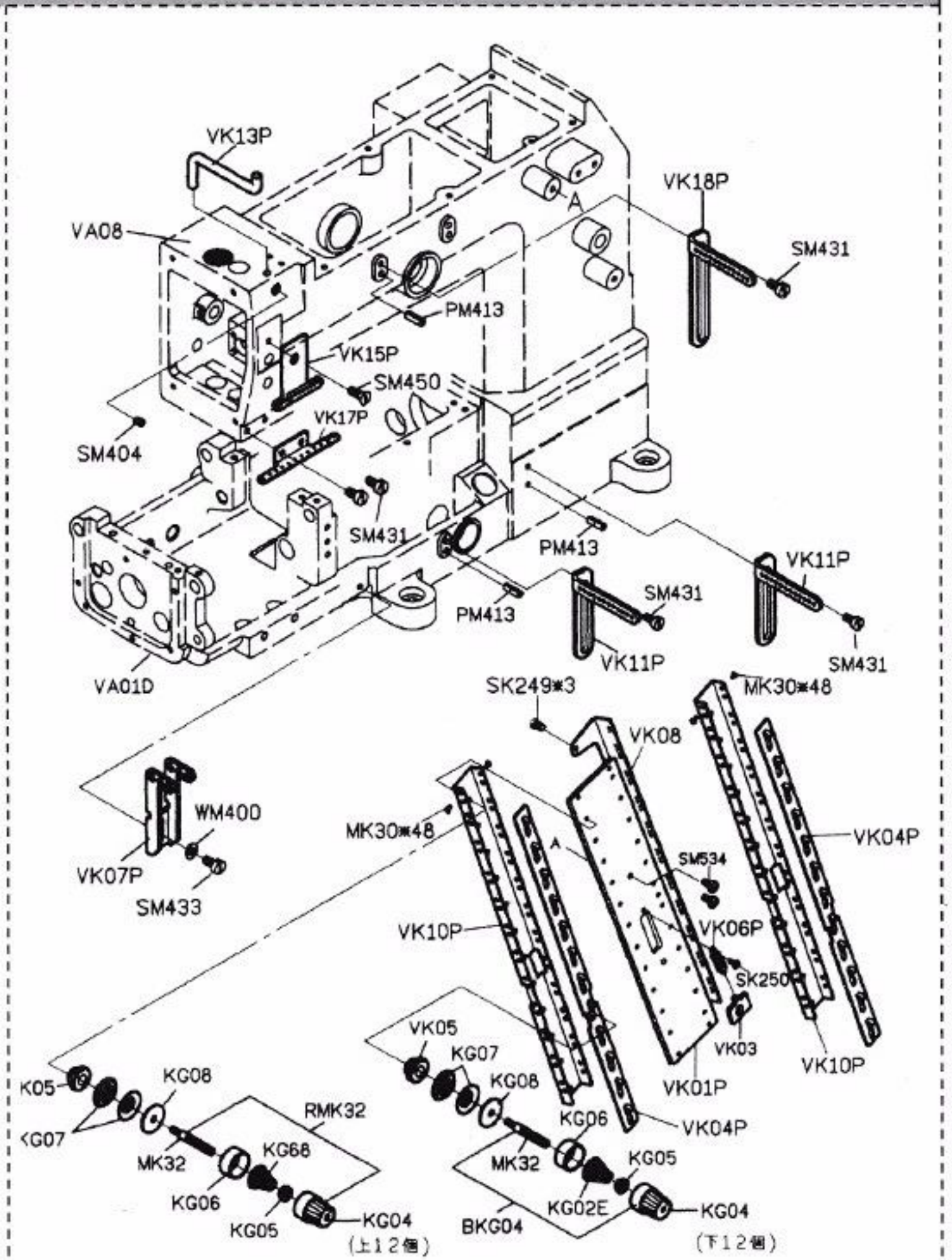

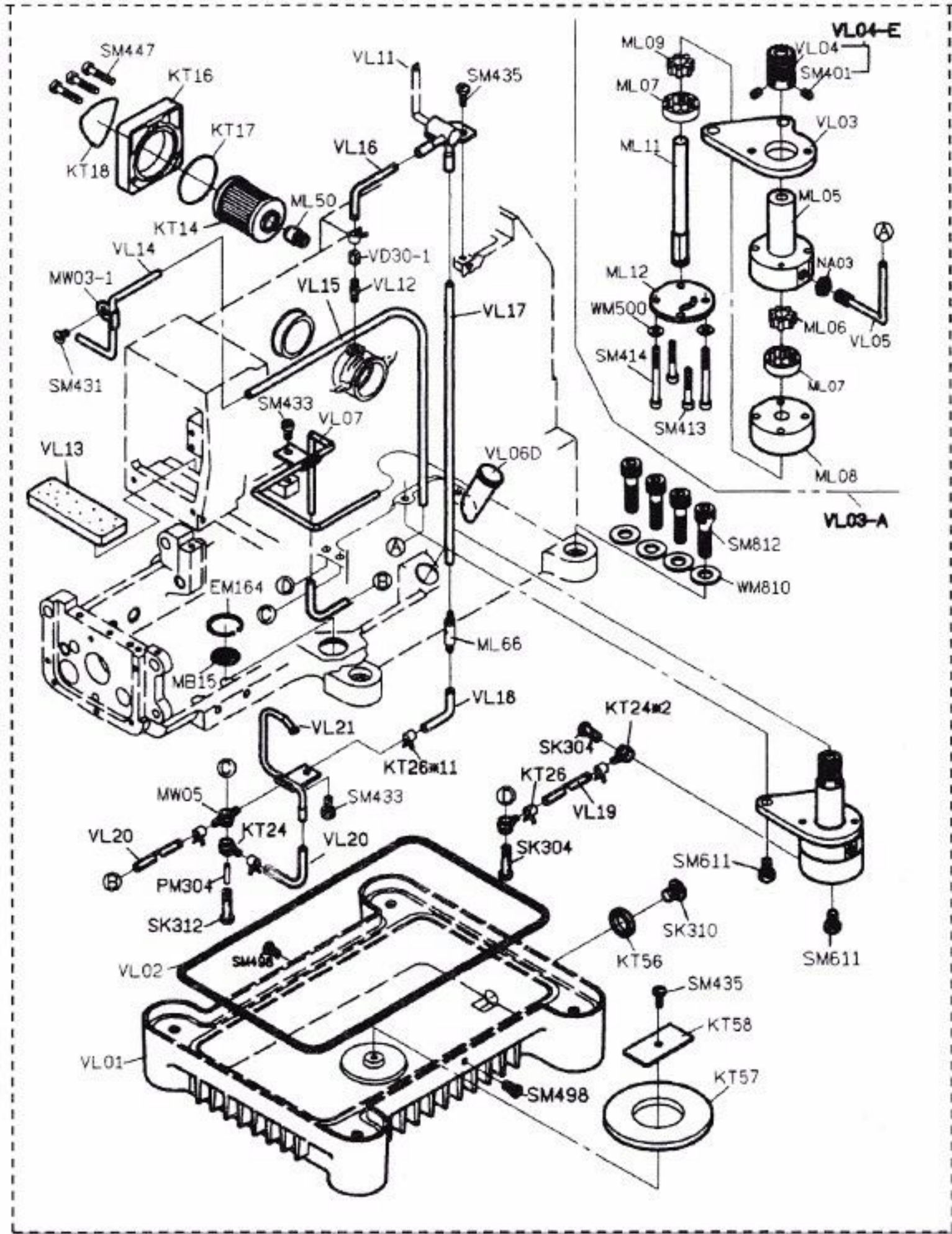

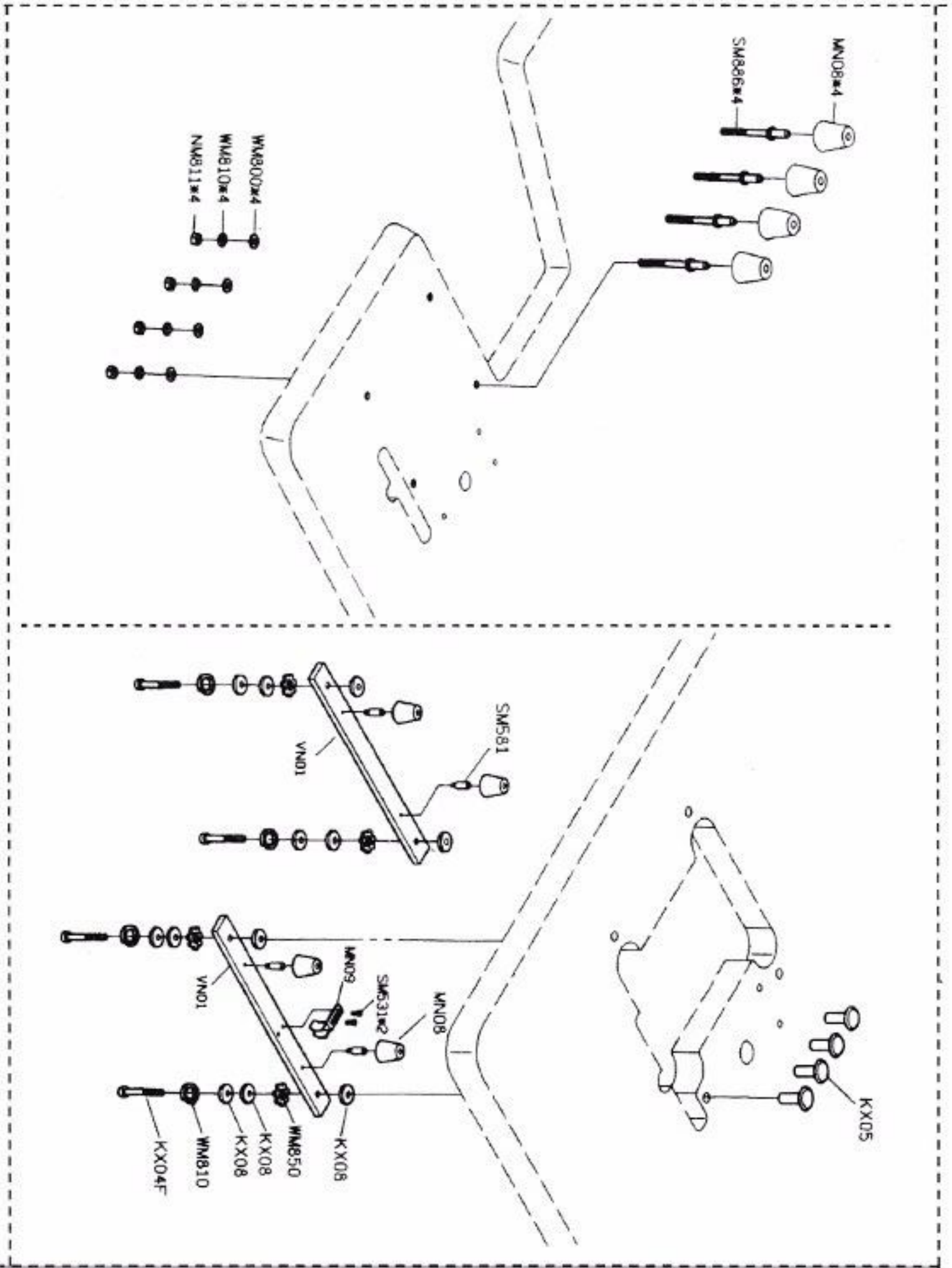

PARTS LIST FOR VL GROUP

PARTS LIST FOR VN GROUP

好推手縫制商机

PARTS LIST FOR VY(1) GROUP

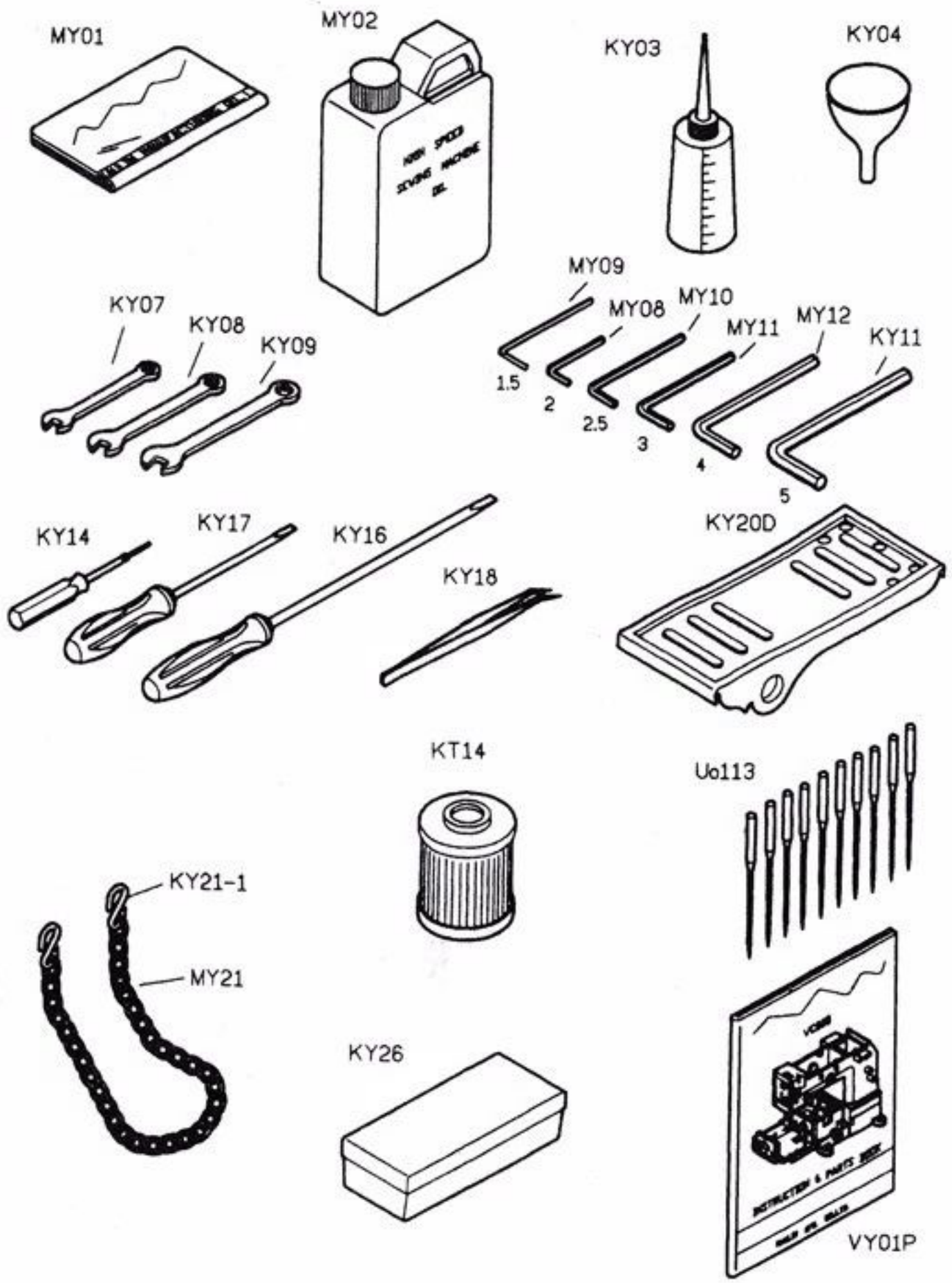

PARTS LIST FOR VY(2) GROUP

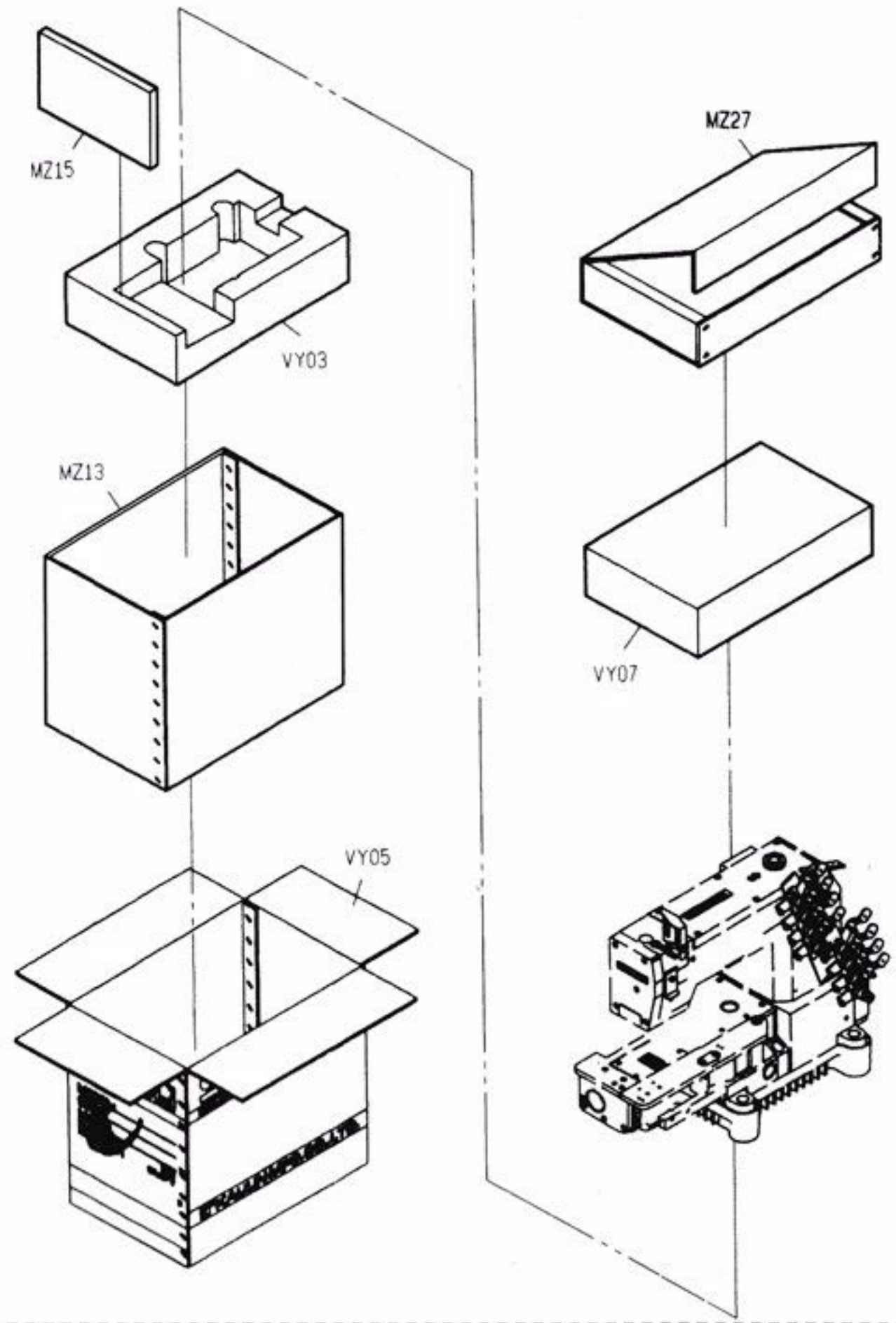

好推手縫制商机

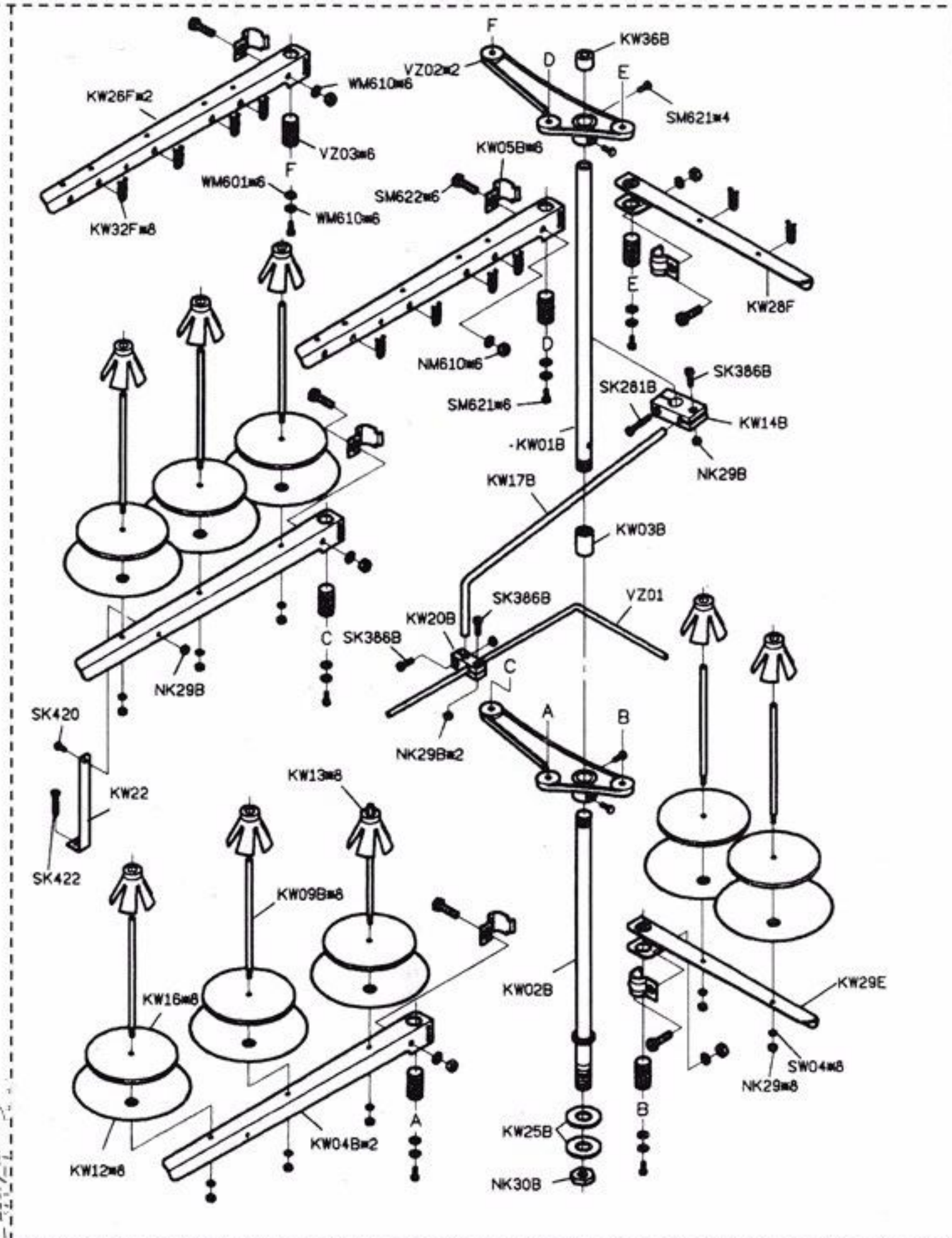

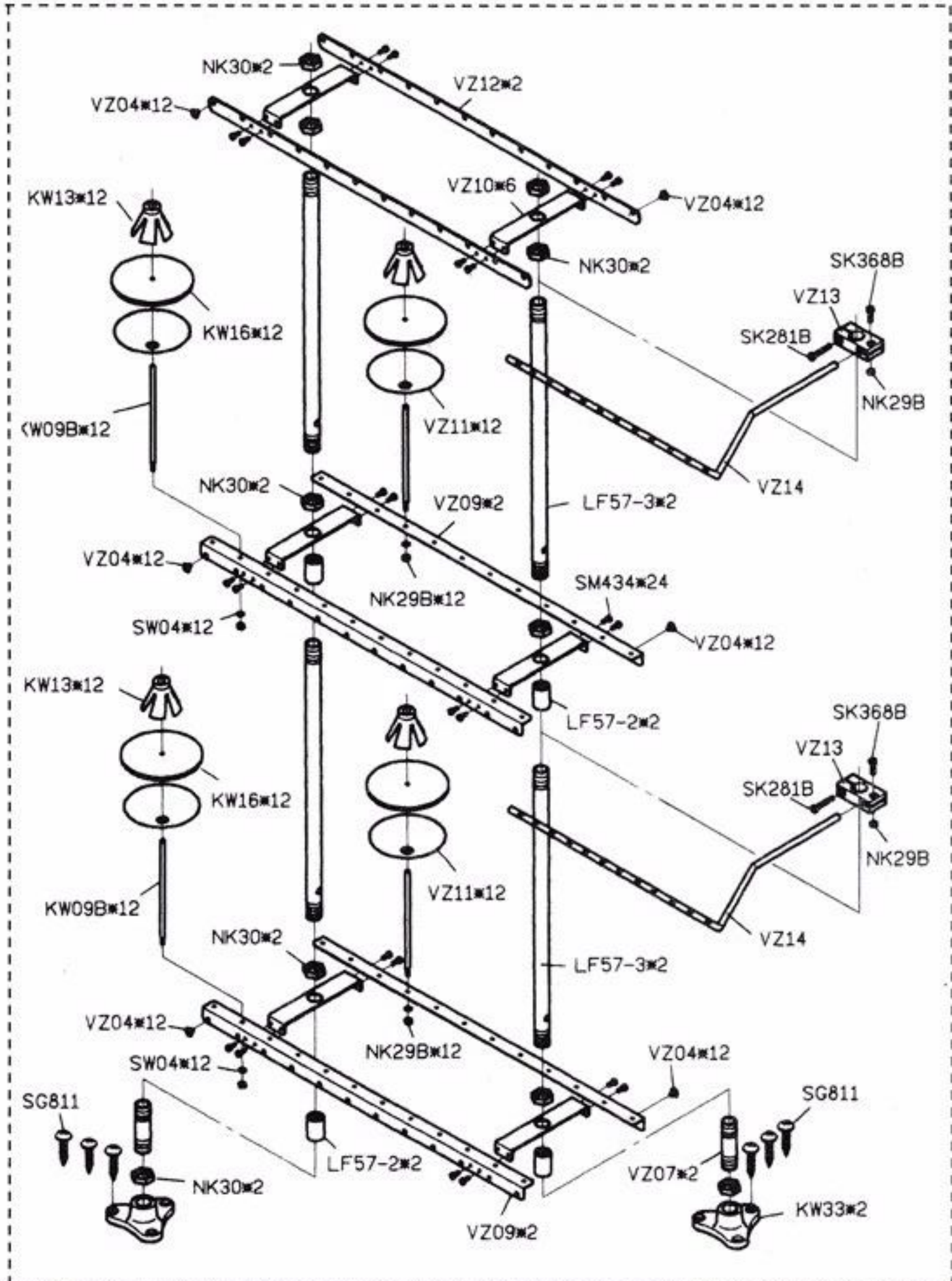

PARTS LIST FOR VZ (1) GROUP - 4 Needles

PARTS LIST FOR VZ (2) GROUP - 12 Needles

PARTS LIST FOR VZ (3) GROUP - VPQ

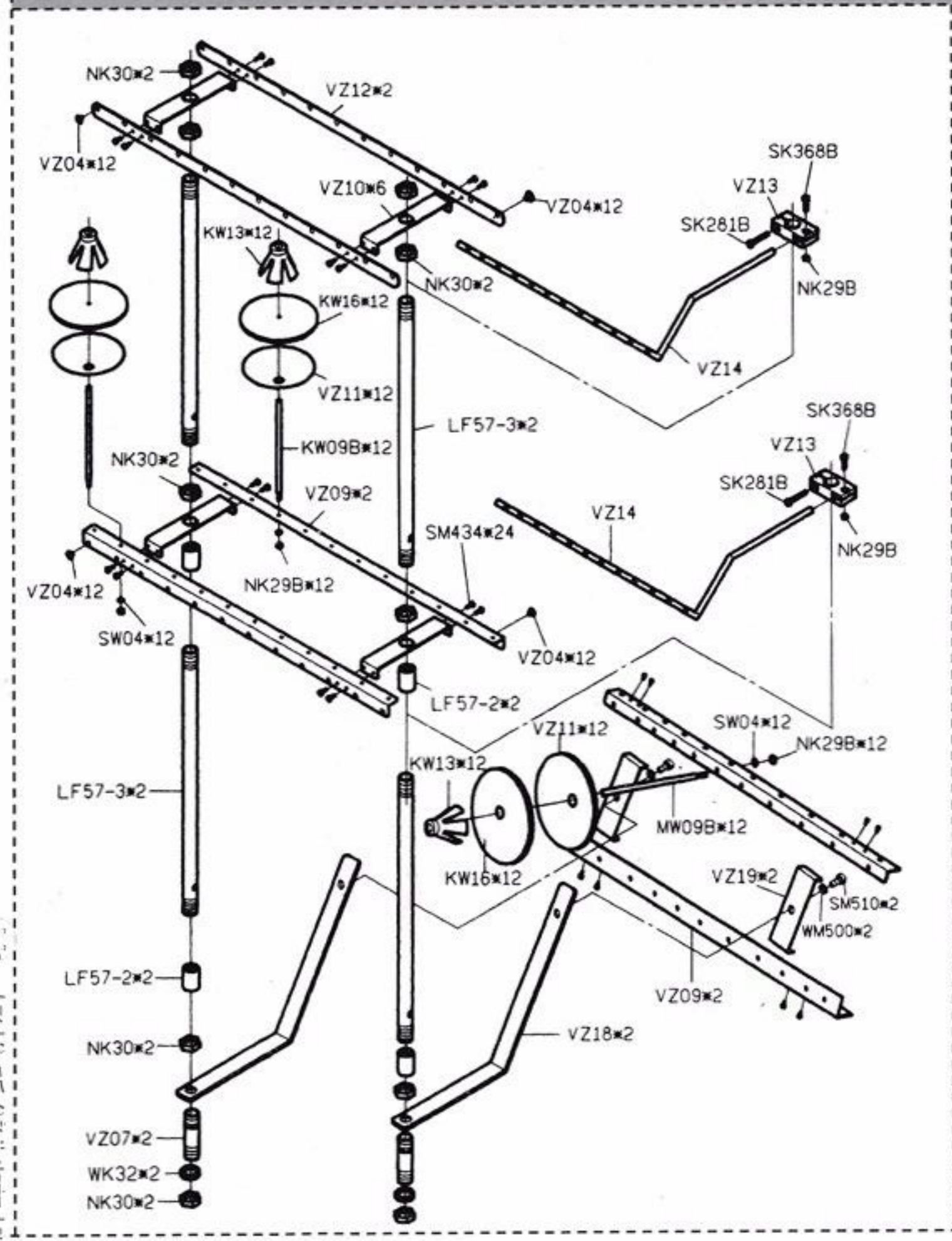

PARTS LIST FOR VCL (1) GROUP

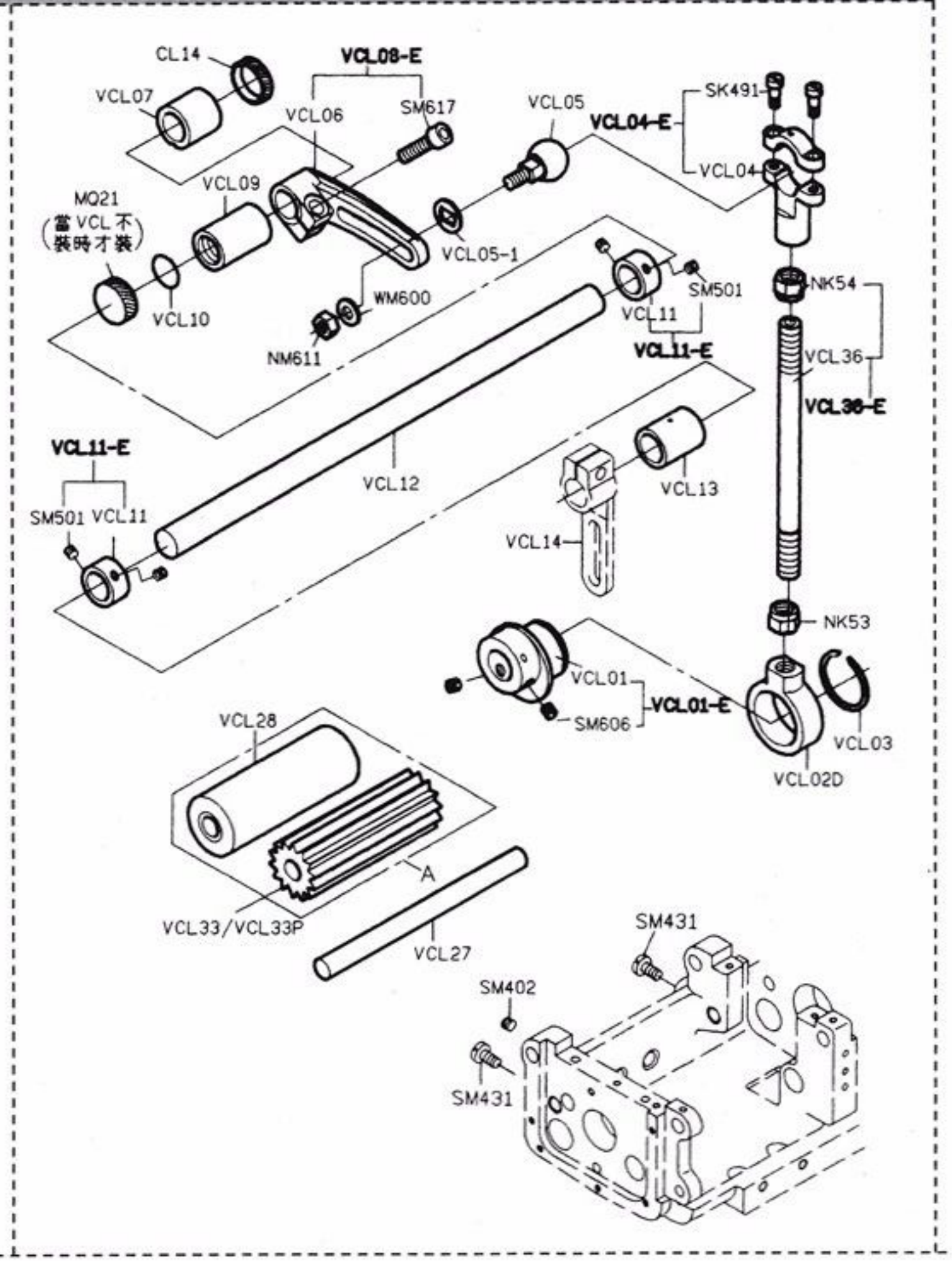

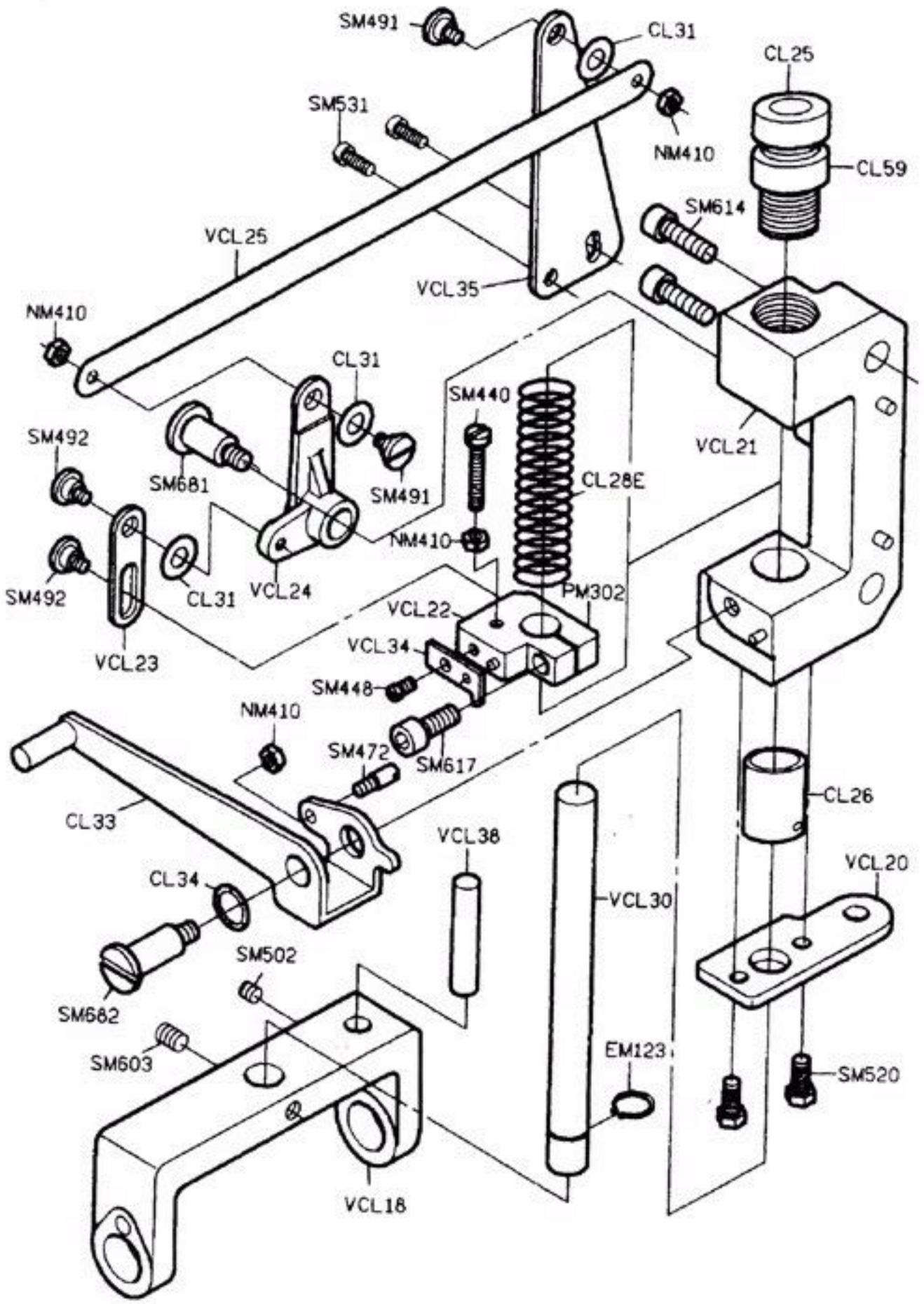

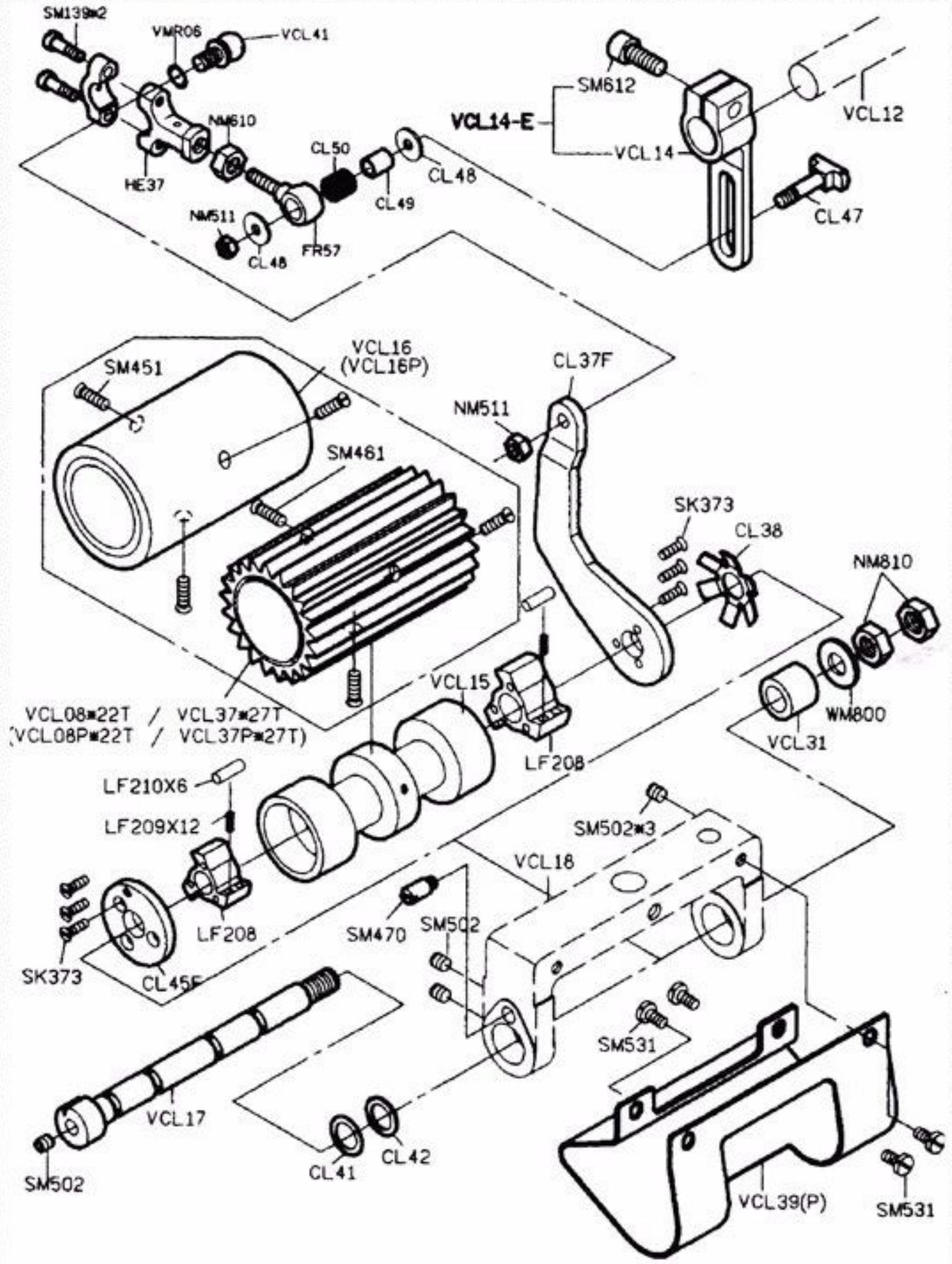

PARTS LIST FOR VCL (2) GROUP

PARTS LIST FOR VCL (4) GROUP